National Rural Electric Cooperative Association
A Touchstone Energy® Cooperative

To: SUNDA Project Cooperatives

From: February 3, 2015

Re: Reference Block Design for Utility Scale PV Solar System

Purpose: Provides a reference block design with simple, convenient features, which is intended to reduce field time and provides monitoring features. This is a reference design and will need to be adjusted for the particulars of a field site, including electrical string length (based on minimum site temperatures), climatic conditions (such as wind and snow loads), row spacing (based on latitude), land contours, shading, and others. Typical engineering time for such adjustment is intended to be, and historically has been, under 100 hrs for site specific modifications.

What's included: a cover sheet that provides a drawing sheet list, six site plans (layouts, trenching and grounding), single line diagrams, schedules, labels, partial plans for inverter pad, conduit details and stringing plans for arrays.

Design Criteria and Attributes used in creating this design:

- Maximize ground coverage ratio, expandable symmetric block
- Fixed, non-tracking design for cost effective construction and low O&M costs
- Efficient design, allows for most of the array construction to be duplicated
- Combiner box locations optimized to reduce DC conductors, avoiding jumpers or other pull boxes in unusual locations
- Equipment pad centrally located, driving reduced feeder cost and transformation local to solar inverters – configurable with other variations
- Immediate transformation drives lower cost of AC MV conductors
- Access roads can be on either side
- Grounding and Surge Protection: metallic array parts, pad halo grounding, fence grounding, surge arrestors in gear
- MV switch is used as site AC disconnect, reduces pad footprint
- Racking system is ETL listed for grounding, reducing significant bonding requirements and on-site labor
- Racking has integrated wire management
- Racking design is very modular, fast to install and accessible height good for install
- AC Switchgear contains the AC bus, the step down transformer for local 120V power and the revenue meter for DAS
- Using 500kw inverters allows for a centralized electrical equipment pad
- Electrical equipment pad is conveniently accessible. Designed to provide easy service access, minimize concrete, optimize feeder stub ups, 1MW pad is cost effective and allows ability to use shared transformer.
- Expandability and flexible re-design options to meet site specific issues
- Track environmental offsets

- Public view website to view performance online or any internet device
- Remotely troubleshoot and track on-site weather data
- Option features: cell-modem, online storage of data, historical data exports, monthly reporting, alarms, curtailment, fault codes and sensors (horizontal/plane of array pyranometers, wind speed/direction, humidity, ambient temp, cell temp, revenue grade meters, load or bus kw meters

DISCLAIMER

While significant effort has been made to incorporate all applicable standards and ensure good engineering and correct practice in the development of this design, and this design has been used to develop actual field deployed, utility-scale, solar PV systems, no warranty or guaranty is made on this design for its fitness, suitability, safety or applicability for any purpose. Utilities must employ a trained engineer to interpret and adjust this reference design for the specific requirements of their application.

NRECA intends for the Materials contained in this design to be useful. These Materials may, however, contain technical inaccuracies, typographical errors or other mistakes. NRECA may make corrections or other changes to these Materials at any time. NRECA and its suppliers reserve the right to make corrections, modifications, enhancements, improvements and other changes to its design, programs and services at any time without notice.

THE MATERIALS IN THIS DESIGN ARE PROVIDED "AS IS". NRECA DISCLAIMS ALL WARRANTIES AND CONDITIONS WITH REGARD TO THESE MATERIALS, INCLUDING BUT NOT LIMITED TO, ALL IMPLIED WARRANTIES AND CONDITIONS OF MERCHANTABILITY, FITNESS FOR A PARTICULAR PURPOSE, TITLE AND NONINFRINGEMENT OF ANY THIRD PARTY INTELLECTUAL PROPERTY RIGHT.

YOU ACKNOWLEDGE AND AGREE THAT THE APPLICATION NOTES, REFERENCE DESIGNS AND OTHER SUCH DESIGN MATERIALS INCLUDED HEREIN ARE PROVIDED AS AN EXAMPLE ONLY AND THAT YOU WILL EXERCISE YOUR OWN INDEPENDENT ANALYSIS AND JUDGMENT IN YOUR USE OF THESE MATERIALS. NRECA ASSUMES NO LIABILITY FOR YOUR USE OF THESE MATERIALS OR YOUR PRODUCT DESIGNS OR ANY APPLICATION OR APPLICATION ASSISTANCE PROVIDED BY NRECA.

NRECA DOES NOT WARRANT OR REPRESENT THAT ANY LICENSE, EITHER EXPRESS OR IMPLIED, IS GRANTED UNDER ANY PATENT RIGHT, COPYRIGHT, MASK WORK RIGHT, OR OTHER INTELLECTUAL PROPERTY RIGHT OF NRECA COVERING OR RELATING TO THESE MATERIALS OR ANY COMBINATION, MACHINE, OR PROCESS TO WHICH THESE MATERIALS RELATE OR WITH WHICH THESE MATERIALS MAY BE USED.

IN NO EVENT SHALL NRECA BE LIABLE FOR ANY INDIRECT, SPECIAL, INCIDENTAL OR CONSEQUENTIAL DAMAGES OR ANY DAMAGES WHATSOEVER, INCLUDING BUT NOT LIMITED TO, DAMAGES RESULTING FROM LOSS OF USE, DATA OR PROFITS, WHETHER IN AN ACTION OF CONTRACT, NEGLIGENCE OR OTHER TORTIOUS ACTION RESULTING FROM USE OF THIS MATERIAL OR ARISING OUT OF THE USE OR PERFORMANCE OF THE DESIGN, REGARDLESS OF WHETHER NRECA OR AN AUTHORIZED NRECA REPRESENTATIVE HAS BEEN ADVISED OF THE POSSIBILITY OF SUCH DAMAGES.

SUNDA REFERENCE DESIGN

255.2KWac 1,000Vdc

AC SYSTEM SIZE:	255.2 KW AC
DC SYSTEM SIZE:	312.93 KW DC
STRING SIZE:	19 MODULES
STRING COUNT:	54
MODULES:	1,026 REC 305W
INVERTERS:	11 ADVANCED ENERGY 23.2KW
DC VOLTAGE:	1,000V
AC VOLTAGE:	480V, 3ϕ
ARRAY TILT:	25°
RACKING:	SCHLETTER FS 2 HIGH PORTRAIT X 19 WIDE

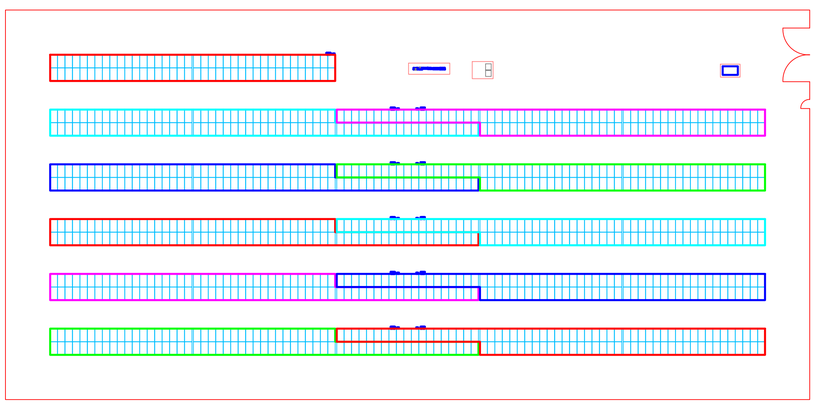

DRAWING SHEET LIST	
PV0.1	COVER SHEET
PV1.0	SITE PLAN - ARRAY LAYOUT
PV1.1	SITE PLAN - FENCE LAYOUT
PV1.2	SITE PLAN - MEDIUM VOLTAGE ROUTING
PV1.3	SITE PLAN - INVERTER LAYOUT
PV1.4	SITE PLAN - AC ROUTING
PV1.5	SITE PLAN - ARRAY GROUNDING
PV2.0	PV SINGLE LINE DIAGRAM
PV2.1	PV SCHEDULES
PV3.0	PARTIAL PLAN - EQUIPMENT PAD DIMENSIONS
PV3.1	PARTIAL PLAN - EQUIPMENT PAD FEEDER ROUTING
PV3.2	PARTIAL PLAN - EQUIPMENT PAD GROUNDING
PV4.0	PV RISER DIAGRAM
PV4.1	FENCE GROUNDING DETAIL
PV5.0	CONDUIT STUB UP DETAILS
PV5.1	CONDUIT DETAILS & COMBINER DETAIL
PV6.0	STRINGING PLAN ARRAY A

PRELIMINARY
NOT FOR
CONSTRUCTION

N

Power Secure
Solar Energy Solutions
1609 Heritage Commerce Ct.
Wake Forest, NC 27587

THIS LINE SHOULD MEASURE ONE INCH

REV.	DATE	DESCRIPTION

TITLE: COVER SHEET

PROJECT: NRECA SUNDA REFERENCE DESIGN 250KW – 1,000Vdc

DATE: 02.06.2015

SHEET: PV0.1

Plot Date:2/16/2015

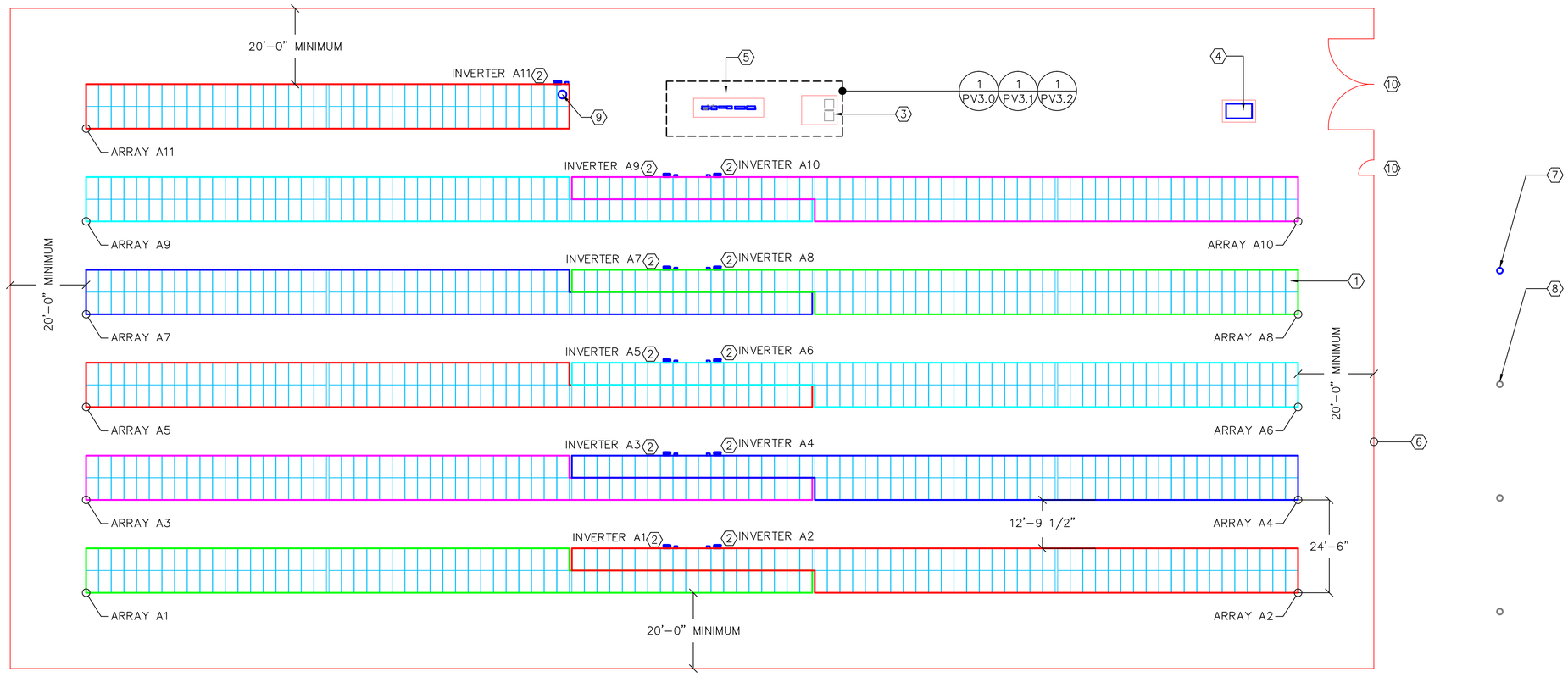

(1) SITE PLAN – ARRAY LAYOUT
SCALE: 1/16"=1'-0"

KEYED NOTES: (X)

1. PV MODULE, TYPICAL OF 1,026.
2. INVERTER AND AC DISCONNECT.
3. MEDIUM VOLTAGE TRANSFORMER.
4. GROUND MOUNTED MEDIUM VOLTAGE FUSED DISCONNECT SWITCH.
5. EQUIPMENT PAD.
6. FENCE LINE.
7. CONTRACTOR PROVIDED POLE MOUNTED COORDINATED SWITCH.
8. UTILITY PROVIDED POLE, POINT OF INTERCONNECTION.
9. BACK OF MODULE TEMPERATURE SENSOR.
10. GATE.

GENERAL NOTES:

1. REFER TO EQUIPMENT SCHEDULE FOR SPECIFICATION.
2. REFER TO SINGLE LINE DIAGRAM AND FEEDER SCHEDULE FOR SPECIFICATIONS.
3. PROVIDE RACKING SYSTEM AT 25° TILT. RACKING SYSTEM SHALL BE A PIER DRIVEN SYSTEM. EACH RACKING SECTION SHALL CONTAIN 2 MODULES HIGH IN PORTRAIT. HORIZONTAL DISTANCE BETWEEN RACK SECTIONS SHALL BE SPECIFIED BY MANUFACTURE. THE RACKING SYSTEM SHALL BE UL LISTED FOR GROUNDING CONTINUITY. COMPONENTS WITHIN THE RACKING SYSTEM SHALL FORM AN ELECTRICALLY BONDED UNIT AND WILL REQUIRE ADDITIONAL BONDING FROM ONE INDIVIDUAL RACK SECTION TO ADJACENT SECTIONS. MANUFACTURER SHALL PROVIDE SIGNED AND SEALED STRUCTURAL DOCUMENTATION.
4. STRINGING FEEDERS SHALL BE ROUTED IN RACKING INTEGRATED WIRE MANAGEMENT OR BELOW GRADE.
5. AC FEEDERS SHALL BE ROUTED BELOW GRADE TO EQUIPMENT PAD, REFER TO AC ROUTING PLAN.

LINE TYPE LEGEND

MODULE	
CONCRETE PAD	
FENCE LINE	
CONTRACTOR PROVIDED EQUIPMENT	
EXISTING/UTILTIY PROVIDED EQUIPMENT	

PRELIMINARY
NOT FOR
CONSTRUCTION

N

Power Secure
Solar Energy Solutions
1609 Heritage Commerce Ct.
Wake Forest, NC 27587

THIS LINE SHOULD MEASURE ONE INCH

REV.	DATE	DESCRIPTION

TITLE: SITE PLAN – ARRAY LAYOUT

PROJECT: NRECA SUNDA REFERENCE DESIGN 250KW – 1,000Vdc

DATE: 02.06.2015

SHEET: PV1.0

Plot Date:2/16/2015

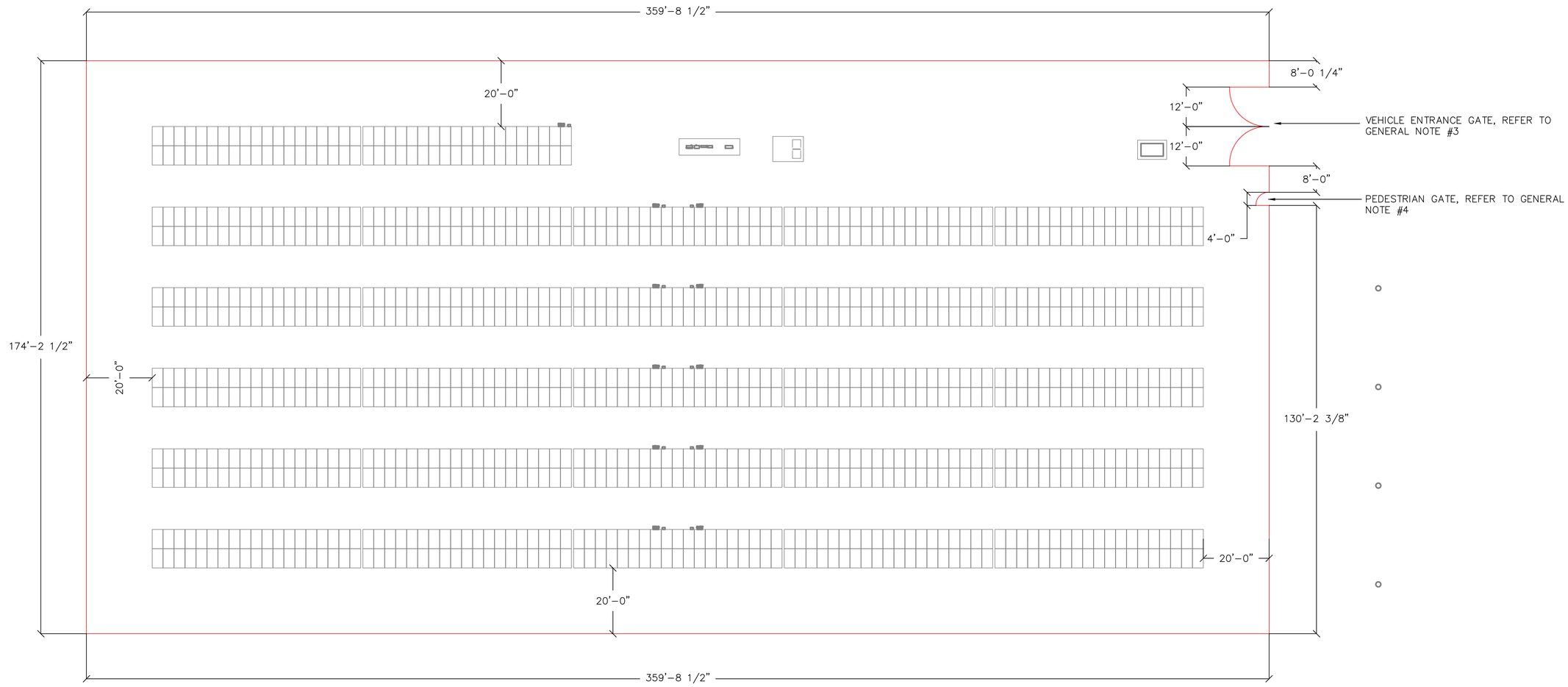

1 SITE PLAN – FENCE LAYOUT
SCALE: 1/16"=1'-0"

GENERAL NOTES

1. TOTAL FENCE LENGTH IS APPROXIMATELY 1,070 FEET.
2. FENCE SHALL BE 6'-0" TALL TOPPED WITH 3 STRING BARBED WIRE NO LESS THAN 12" IN HEIGHT, FOR AN OVERALL HEIGHT OF 7'-0" MINIMUM PER NEC 110.31.
3. ONE VEHICLE ENTRANCE GATE, 24' MINIMUM IN WIDTH, LOCATED AS SHOWN.
4. ONE PEDESTRIAN GATE, 4' MINIMUM IN WIDTH, LOCATED AS SHOWN.
5. REFER TO FENCE GROUNDING DETAIL.

PRELIMINARY
NOT FOR
CONSTRUCTION

N

Power Secure Solar Energy Solutions
1609 Heritage Commerce Ct.
Wake Forest, NC 27587

THIS LINE SHOULD MEASURE ONE INCH

REV.	DATE	DESCRIPTION

TITLE: SITE PLAN – FENCE LAYOUT

PROJECT: NRECA
SUNDA REFERENCE DESIGN
250KW – 1,000Vdc

DATE: 02.06.2015

SHEET: PV1.1

Plot Date:2/16/2015

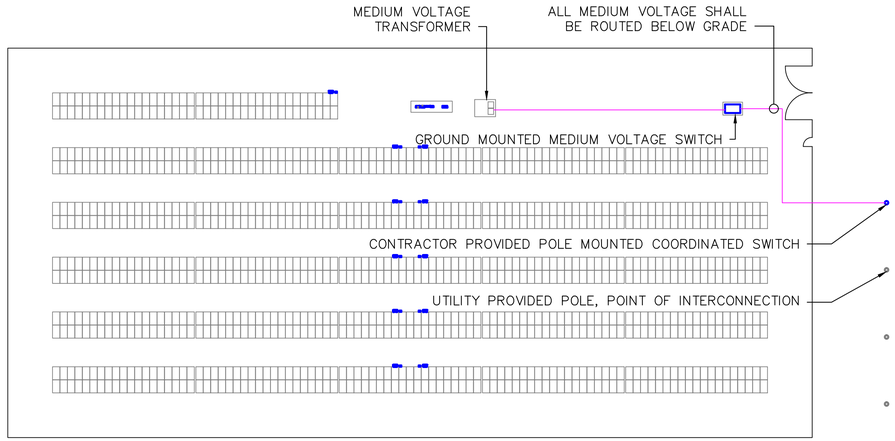

1 SITE PLAN – MEDIUM VOLTAGE ROUTING
SCALE: 1/32"=1'-0"

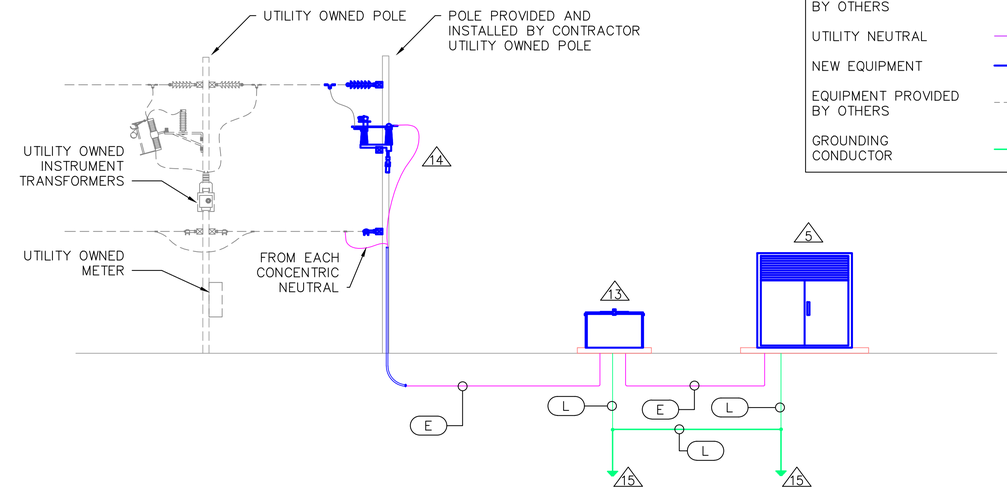

2 MEDIUM VOLTAGE – INTERCONNECTION DETAIL
SCALE: NONE

LINE TYPE LEGEND

- MV FEEDERS
- FEEDERS PROVIDED BY OTHERS
- UTILITY NEUTRAL
- NEW EQUIPMENT
- EQUIPMENT PROVIDED BY OTHERS
- GROUNDING CONDUCTOR

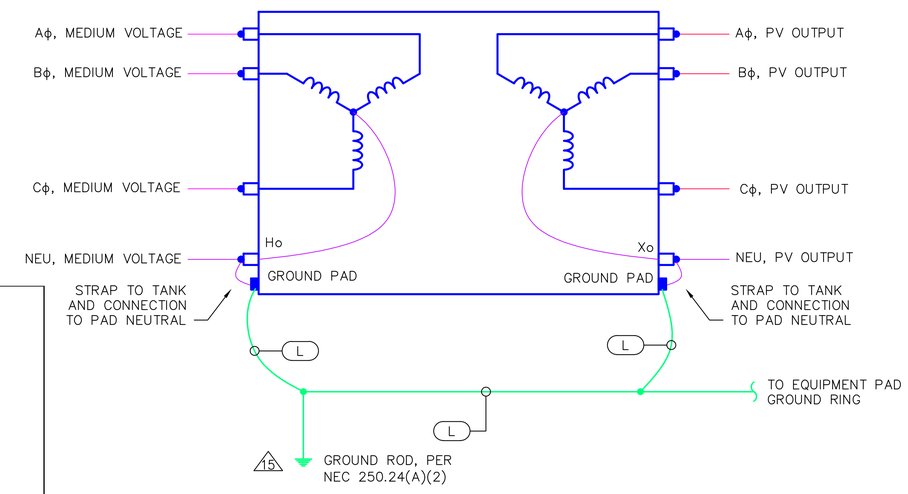

3 MEDIUM VOLTAGE TRANSFORMER DETAIL
SCALE: NONE

FEEDER SCHEDULE
**FEEDER IS NOTED BY α

TAG	CONDUCTOR TYPE	CONDUCTOR TYPE	INSULATION TYPE	GROUND SIZE	GROUND TYPE	GROUND INSULATION TYPE	RACEWAY SIZE	RACEWAY QUANTITY NOTE2
A8	(8) #10 PER RACEWAY	COPPER	PV	(1) #10 PER RACEWAY	COPPER	PV	1-1/4" NOTE5	(1)
A10	(10) #10 PER RACEWAY	COPPER	PV	(1) #10 PER RACEWAY	COPPER	PV	1-1/2" NOTE5	(1)
B	(3) #8 PER RACEWAY	COPPER	THWN-2	(1) #10 PER RACEWAY	COPPER	THWN-2	1"	(1)
	(1) #8 PER RACEWAY	COPPER	THWN-2					
C	(3) 300 KCMIL PER RACEWAY	ALUMINUM	THWN-2	(1) #3 PER RACEWAY	COPPER	THWN-2	3"	(2)
	(1) 300 KCMIL PER RACEWAY	ALUMINUM	THWN-2					
D	(3) 300 KCMIL PER RACEWAY	ALUMINUM	THWN-2				3"	(2)
	(1) 300 KCMIL PER RACEWAY	ALUMINUM	THWN-2					
E NOTE6	(3) #1/0 PER RACEWAY	ALUMINUM	MV TR-XLPE WITH CONCENTRIC NEUTRAL				4"	(1)
F	BLENDEN#3084A						3/4"	(1)
G	MANUFACTURER PROVIDED WHIP						1-1/4"	(1)
H	(3) #12 PER RACEWAY	COPPER	THWN-2	(1) #12 PER RACEWAY	COPPER	THWN-2	3/4"	(1)
	(1) #12 PER RACEWAY	COPPER	THWN-2					
I	(3) #12 PER RACEWAY	COPPER	THWN-2	(1) #12 PER RACEWAY	COPPER	THWN-2	3/4"	(1)
J	(1) #12 PER RACEWAY	COPPER	THWN-2	(1) #12 PER RACEWAY	COPPER	THWN-2	3/4"	(1)
	(1) #12 PER RACEWAY	COPPER	THWN-2					
K				(1) #3 PER RACEWAY	COPPER	THWN-2	3/4"	(1)
L				(1) #1/0 PER RACEWAY	COPPER	BARE		

NOTES:

1. (#) - DENOTES QUANTITY TO BE PROVIDED
2. WHERE MULITPLE CONDUITS ARE NOTED, THE RACEWAYS SHALL BE PROVIDED IN PARALLEL.
3. REFER TO RACEWAY APPLICATION SCHEDULE FOR RACEWAY TYPE.
4. ALL RACEWAY SIZES ARE NEC MINIMUM REQUIREMENTS, LARGER CONDUITS ARE PERMITED FOR EASE OF INSTALLATION.
5. PV SOURCE CIRCUITS SHALL NOT BE REQUIRED TO BE IN RACEWAY IF CONDUCTORS ARE NOT READILY ACCESSIBLE AND NOT EXPOSED TO PHYSICAL DAMAGE. BELOW GRADE PV SOURCE CIRCUITS SHALL BE IN RACEWAY.
6. PROVIDE 15KV MEDIUM VOLTGE FEEDERS WITH 100% INSULATION.

EQUIPMENT SCHEDULE
**EQUIPMENT IS NOTED BY #

TAG	DESCRIPTION	QUANTITY	DESCRIPTION
1	SOLAR PV MODULE	1026	305 WATT MODULE (REFER TO DRAWINGS FOR QUANTITY AND LOCATION). MODULES SHALL BE LABELED PER NEC 690 VI.
2	INVERTER	11	23.2 KWATT, 3 PHASE 480 VOLT 4 WIRE & GROUND (REFER TO INVERTER RATING SCHEDULE FOR SPECIFICATION)
3	AC DISCONNECT	11	60 AMP 3 POLE FUSED DISCONNECT WITH (3) 35 AMP FUSES, NEMA 12 ENCLOSURE WITHOUT KNOCKOUTS, DRAIN SCREW MUST BE REMOVED TO MAINTAIN OUTDOOR RATING. PROVIDE STICKER LABEL TO BE VISIBLE WHEN FUSE IS REMOVED TO READ "MAX 35A". SUITABLE FOR SERVICE ENTRANCE WHEN PROVIDED WITH NEUTRAL ASSEMBLY KIT AND EQUIPMENT GROUNDING KIT.
4	PANEL PV-1	1	800 AMP BUS WITH MAIN LUGS ONLY. REFER TO PANEL SCHEDULE FOR ADDITIONAL SPECIFICATIONS.
5	MEDIUM VOLTAGE TRANSFORMER	1	250KVA, THREE PHASE, 12.47KV YGRD/7.2KV PRIMARY AND 480V WYE SECONDARY, LIQUID COOLED TRANSFORMER, BAYONET FUSES ON PRIMARY SIDE. REQUIRED TO MEET UTILITY REQUIREMENTS.
6	DISTRIBUTION TRANSFORMER	1	2KVA THREE PHASE GENERAL PURPOSE DRY TYPE TRANSFORMER, PRIMARY VOLTS 480 VAC, SECONDARY VOLTS 208/120 VAC, NEMA 3R ENCAPSULATED ENCLOSURE
7	PANEL PV-A	1	PV AUXILIARY POWER PANEL, 100 AMP BUS WITH 15 AMP MAIN CIRCUIT BREAKER. REFER TO PANEL SCHEDULE FOR ADDITIONAL SPECIFICATIONS.
8	PV PRODUCTION MONITORING SYSTEM	1	CENTRAL DATA ACQUISITION UNIT, NEMA 3R ENCLOSURE WITH BATTERY BACK UP, LOCAL DATA STORAGE, INTEGRAL EHTERNET COMMUNICATIONS , WEB BASED DISPLAY AND LOCAL KEYPAD DISPLAY, PROVIDE 120V 1ϕ POWER SUPPLY
9	PHOTOVOLTAIC MONITORING METEOROLOGICAL STATION	1	STATION INCLUDES: REFERENC CELL FOR PYRANOMETER - PLANE OF ARRAY, BACK OF MODULE TEMPERATURE SENSOR WEATHER STATION FOR AMBIENT TEMPERATURE, WIND, AND RAIN SENSORS
10	PHOTOVOLTAIC PRODUCTION METER	1	REVENUE GRADE METER IN NEMA 3R ENCLOSURE PROVIDED AS PART OF THE MONITORING SYSTEM. PROVIDE 120V 1ϕ POWER SUPPLY.
11	RECEPTACLE	1	120V, 20 AMP, WEATHER PROOF GFI DUPLEX RECEPTACLE.
12	SERVICE DISCONNECT	1	400 AMP 3 POLE FUSED DISCONNECT WITH (3) 400 AMP FUSES, NEMA 12 ENCLOSURE WITHOUT KNOCKOUTS, DRAIN SCREW MUST BE REMOVED TO MAINTAIN OUTDOOR RATING. PROVIDE STICKER LABEL TO BE VISIBLE WHEN FUSE IS REMOVED TO READ "MAX 400A". SUITABLE FOR SERVICE ENTRANCE WHEN PROVIDED WITH NEUTRAL ASSEMBLY KIT AND EQUIPMENT GROUNDING KIT.
13	MEDIUM VOLTAGE FUSED SWITCH	1	15KV PAD MOUNTED SWITCH, WITH 60A STANDARD SPEED FUSES
14	COORDINATED POLE MOUNTED SWITCH	1	SWITCH TO MEET THE REQUIREMENTS OF THE UTILITY
15	GROUND ROD	3	3/4" DIAMETER, 10'-0" LONG COPPER CLAD GROUND ROD

PRELIMINARY NOT FOR CONSTRUCTION

N

Power Secure Solar Energy Solutions
1609 Heritage Commerce Ct.
Wake Forest, NC 27587

THIS LINE SHOULD MEASURE ONE INCH

REV.	DATE	DESCRIPTION

TITLE: SITE PLAN – MEDIUM VOLTAGE ROUTING

PROJECT: NRECA SUNDA REFERENCE DESIGN 250KW – 1,000Vdc

DATE: 02.06.2015

SHEET: PV1.2

Plot Date:2/16/2015

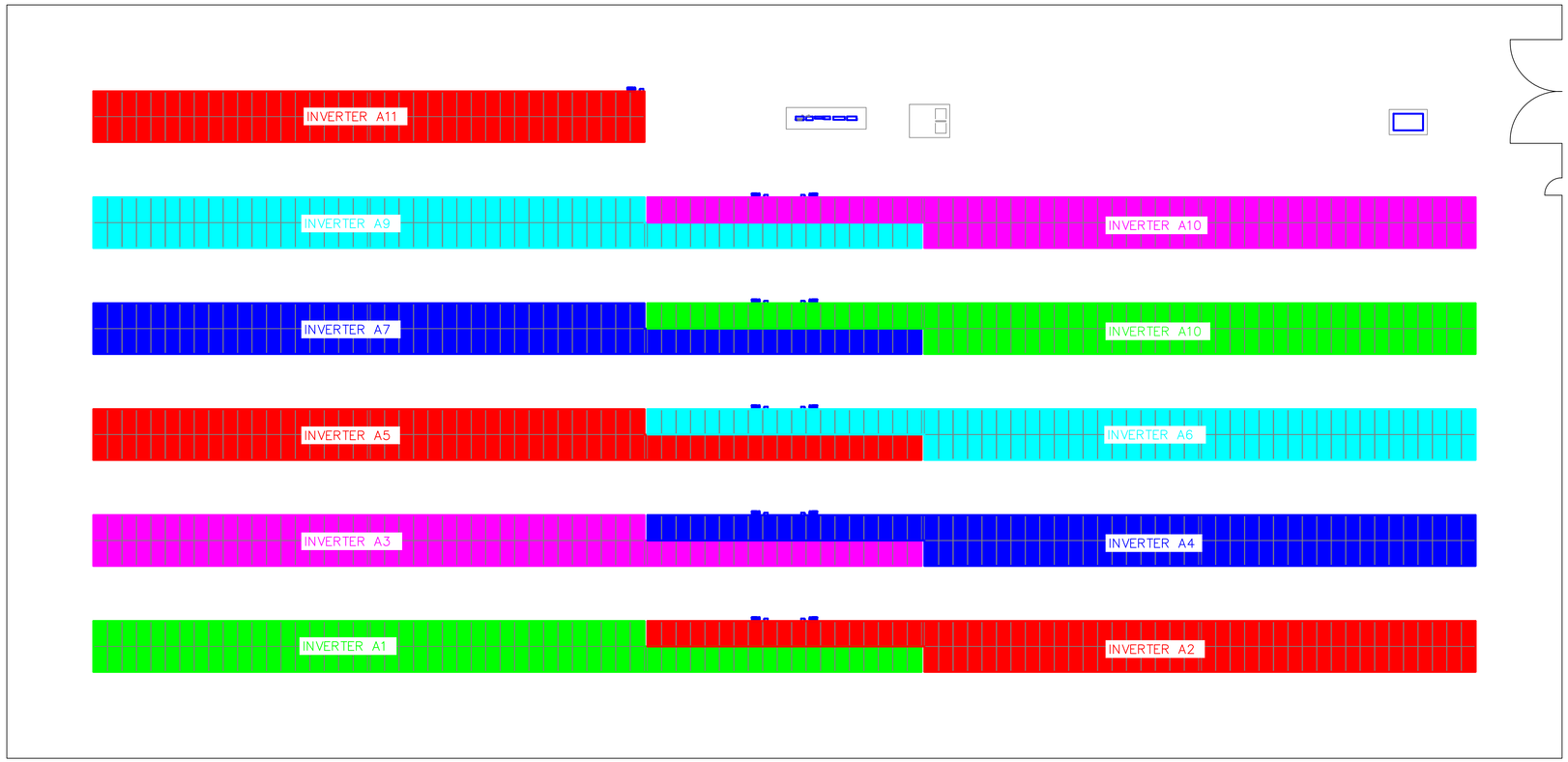

1 SITE PLAN – INVERTER LAYOUT
SCALE: 1/16"=1'-0"

PRELIMINARY
NOT FOR
CONSTRUCTION

N

Power Secure
Solar Energy Solutions
1609 Heritage Commerce Ct.
Wake Forest, NC 27587

THIS LINE SHOULD MEASURE ONE INCH

REV.	DATE	DESCRIPTION

TITLE: SITE PLAN – INVERTER LAYOUT

PROJECT: NRECA
SUNDA REFERENCE DESIGN
250KW – 1,000Vdc

DATE: 02.06.2015
SHEET: PV1.3

Plot Date:2/10/2015

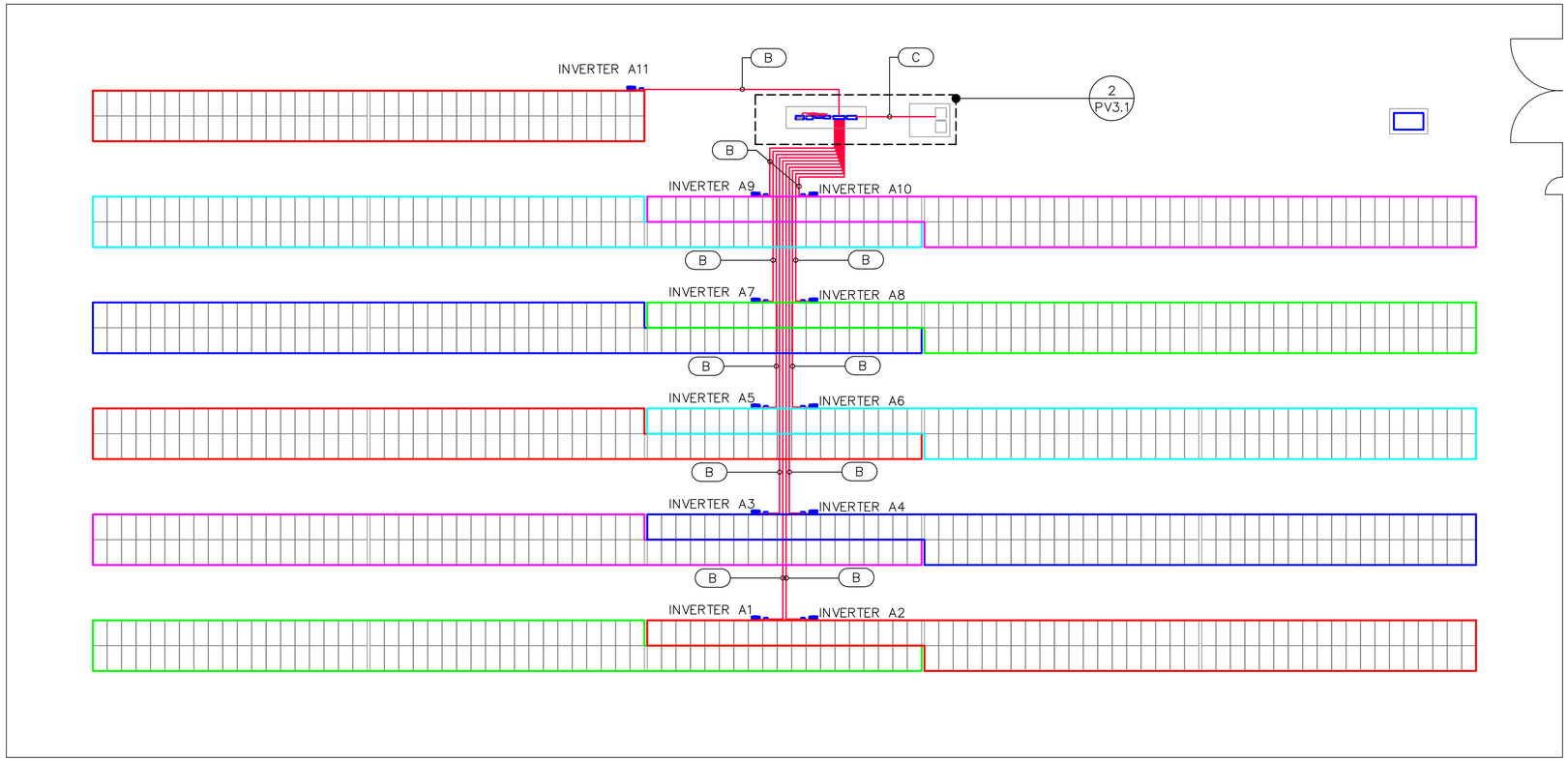

1 SITE PLAN – AC ROUTING
SCALE: 1/16"=1'–0"

FEEDER SCHEDULE
**FEEDER IS NOTED BY α

TAG	CONDUCTOR TYPE	CONDUCTOR TYPE	INSULATION TYPE	GROUND SIZE	GROUND TYPE	GROUND INSULATION TYPE	RACEWAY SIZE	RACEWAY QUANTITY NOTE 2
A8	(8) #10 PER RACEWAY	COPPER	PV	(1) #10 PER RACEWAY	COPPER	PV	1-1/4" NOTE5	(1)
A10	(10) #10 PER RACEWAY	COPPER	PV	(1) #10 PER RACEWAY	COPPER	PV	1-1/2" NOTE5	(1)
B	(3) #8 PER RACEWAY	COPPER	THWN-2	(1) #10 PER RACEWAY	COPPER	THWN-2	1"	(1)
	(1) #8 PER RACEWAY	COPPER	THWN-2					
C	(3) 300 KCMIL PER RACEWAY	ALUMINUM	THWN-2	(1) #3 PER RACEWAY	COPPER	THWN-2	3"	(2)
	(1) 300 KCMIL PER RACEWAY	ALUMINUM	THWN-2					
D	(3) 300 KCMIL PER RACEWAY	ALUMINUM	THWN-2				3"	(2)
	(1) 300 KCMIL PER RACEWAY	ALUMINUM	THWN-2					
E NOTE6	(3) #1/0 PER RACEWAY	ALUMINUM	MV TR-XLPE WITH CONCENTRIC NEUTRAL				4"	(1)
F	BLENDEN#3084A						3/4"	(1)
G	MANUFACTURER PROVIDED WHIP						1-1/4"	(1)
H	(3) #12 PER RACEWAY	COPPER	THWN-2	(1) #12 PER RACEWAY	COPPER	THWN-2	3/4"	(1)
	(1) #12 PER RACEWAY	COPPER	THWN-2					
I	(3) #12 PER RACEWAY	COPPER	THWN-2	(1) #12 PER RACEWAY	COPPER	THWN-2	3/4"	(1)
J	(1) #12 PER RACEWAY	COPPER	THWN-2	(1) #12 PER RACEWAY	COPPER	THWN-2	3/4"	(1)
	(1) #12 PER RACEWAY	COPPER	THWN-2					
K				(1) #3 PER RACEWAY	COPPER	THWN-2	3/4"	(1)
L				(1) #1/0 PER RACEWAY	COPPER	BARE		

NOTES:
1. (#) - DENOTES QUANTITY TO BE PROVIDED
2. WHERE MULITPLE CONDUITS ARE NOTED, THE RACEWAYS SHALL BE PROVIDED IN PARALLEL.
3. REFER TO RACEWAY APPLICATION SCHEDULE FOR RACEWAY TYPE.
4. ALL RACEWAY SIZES ARE NEC MINIMUM REQUIREMENTS, LARGER CONDUITS ARE PERMITED FOR EASE OF INSTALLATION.
5. PV SOURCE CIRCUITS SHALL NOT BE REQUIRED TO BE IN RACEWAY IF CONDUCTORS ARE NOT READILY ACCESSIBLE AND NOT EXPOSED TO PHYSICAL DAMAGE. BELOW GRADE PV SOURCE CIRCUITS SHALL BE IN RACEWAY.
6. PROVIDE 15KV MEDIUM VOLTGE FEEDERS WITH 100% INSULATION.

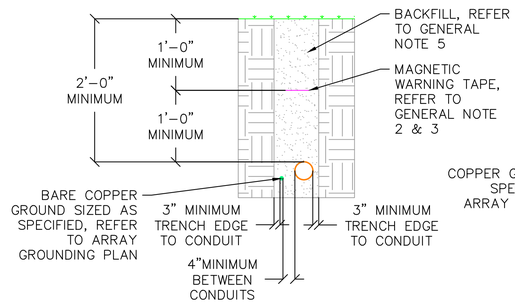

2 TYPICAL SINGLE CONDUIT TRENCH
SCALE: NONE

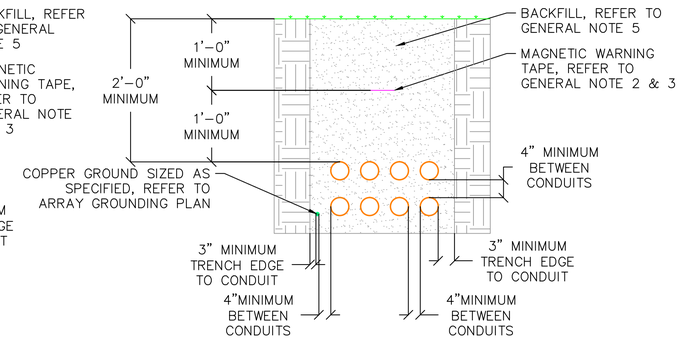

3 TYPICAL MULTIPLE CONDUIT TRENCH
SCALE: NONE

GENERAL NOTES:

1. ALL UNDERGROUND RACEWAY SHALL BE SCHEDULE 40 PVC. TRANSITIONS BELOW TO ABOVE GRADE SHALL BE PER CONDUIT STUB UP DETAIL.
2. FOR TRENCHES 24" WIDE AND LESS, ONLY ONE RUN OF MAGNETIC ELECTRICAL WARNING TAPE SHALL BE REQUIRED PER DETAIL 3.
3. FOR TRENCHES WIDER THAN 24" ONE PIECE OF TAPE SHALL BE LOCATED AT EACH SIDE OF THE TRENCH WITH ADDITIONAL RUNS PROVIDED AS NECESSARY. THE MAXIMUM DISTANCE BETWEEN TAPE RUNS SHALL BE 24" ON CENTER.
4. TRENCH BOTTOMS: EXCAVATE TRENCHES 3" DEEPER THAN BOTTOM OF PIPE ELEVATION TO ALLOW FOR BEDDING COURSE. HAND EXCAVATE FOR BELL OF PIPE. EXCAVATE TRENCHES 3" DEEPER THAN ELEVATION REQUIRED IN ROCK OR OTHER UNYIELDING BEARING MATERIAL TO ALLOW BEDDING COURSE.
5. ALL BACKFILL SHOULD BE FREE OF MATERIALS THAT MAY DAMAGE THE CONDUIT OR CABLE SYSTEM. BACKFILL WITHIN 150 MM (6 IN) OF THE CONDUIT OR CABLE SHOULD BE FREE OF SOLID MATERIAL GREATER THAN 100 MM (2 IN) IN MAXIMUM DIMENSION OR WITH SHARP EDGES LIKELY TO DAMAGE IT. THE BALANCE OF BACKFILL SHOULD BE FREE OF SOLID MATERIAL GREATER THAN 200 MM (8 IN) IN MAXIMUM DIMENSION. BACKFILL MATERIAL SHOULD BE ADEQUATELY COMPACTED.
6. REFER TO ARRAY GROUNDING DETAIL FOR BARE COPPER GROUND TRENCH ROUTING.
7. FEEDER ROUTING SHOWN DIAGRAMMATICALLY, COORDINATION WITH SITE CONDITIONS REQUIRED.

PRELIMINARY
NOT FOR
CONSTRUCTION

N

Power Secure Solar Energy Solutions
1609 Heritage Commerce Ct.
Wake Forest, NC 27587

THIS LINE SHOULD MEASURE ONE INCH

REV.	DATE	DESCRIPTION

TITLE: SITE PLAN – AC ROUTING
PROJECT: NRECA SUNDA REFERENCE DESIGN 250KW – 1,000Vdc
DATE: 02.06.2015
SHEET: PV1.4

PM: Dated/10/2015

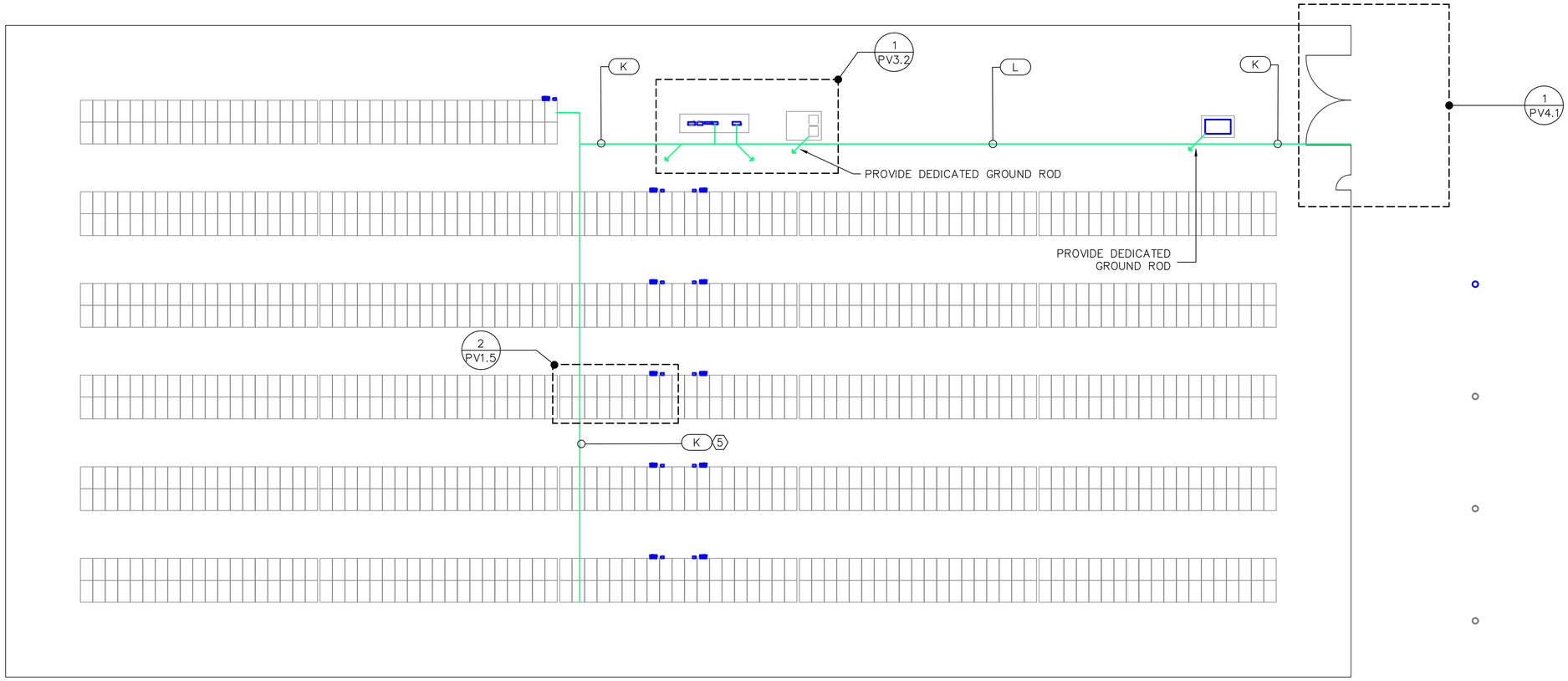

1 SITE PLAN – ARRAY GROUNDING
SCALE: 1/16"=1'-0"

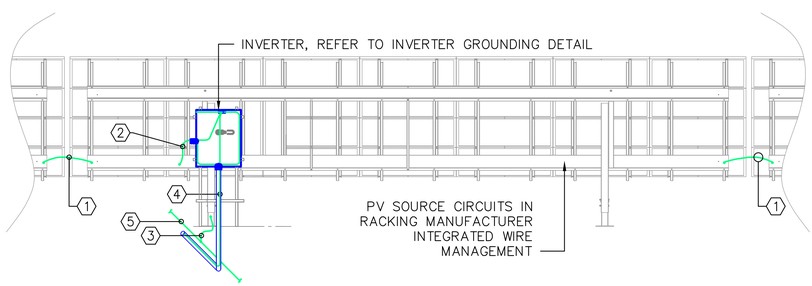

2 TYPICAL GROUND MOUNT RACKING GROUNDING DETAILS
SCALE: NONE

KEYED NOTES: (X)

1. PROVIDE GROUND BRAID BETWEEN RACKING SECTIONS PER RACKING MANUFACTURER INSTRUCTIONS.
2. PROVIDE #6 BARE COPPER BONDING JUMPER FROM THE INVERTER BOX GROUND BAR TO THE WIRE TRAY.
3. PROVIDE #6 BARE COPPER BONDING JUMPER VIA IRREVERSIBLE CRIMP FROM ARRAY EQUIPMENT GROUND CONDUCTOR IN TRENCH TO ONE PIER PER ROW OF RACKING. IRREVERSIBLE CRIMP SHALL BE UL LISTED FOR GROUNDING AND BONDING. ENSURE ALL CONNECTIONS ARE TORQUED TO MANUFACTURER'S RECOMMENDED TORQUE VALUE.
4. PROVIDE EQUIPMENT GROUND CONDUCTOR (REFER TO SINGLE LINE DIAGRAM AND SCHEDULES FOR EGC SIZE) TO INVERTER BUS BAR. EQUIPMENT GROUND CONDUCTOR SHALL BE RUN IN CONDUIT WITH ASSOCIATED PV OUTPUT CONDUCTORS.
5. PROVIDE ARRAY EQUIPMENT GROUND CONDUCTOR (REFER TO SINGLE LINE DIAGRAM AND SCHEDULES FOR EGC SIZE) LENGTH OF ARRAY.

GENERAL NOTES

1. THE RACKING SYSTEM SHALL BE UL LISTED FOR GROUNDING CONTINUITY. COMPONENTS WITHIN THE RACKING SYSTEM SHALL FORM AN ELECTRICALLY BONDED UNIT AND REQUIRE ADDITIONAL BONDING FROM ONE INDIVIDUAL RACK SECTION TO ADJACENT SECTIONS.
2. REFER TO GROUNDING RISER DIAGRAM FOR SYSTEM GROUNDING.
3. REFER TO SINGLE LINE DIAGRAM AND SCHEDULES FOR SPECIFICATIONS
4. ARRAY EQUIPMENT GROUND CONDUCTOR SHALL BE RUN IN TRENCH WITH INVERTER OUTPUT FEEDERS.
5. GROUND ROUTING SHOWN DIAGRAMMATICALLY, COORDINATION WITH SITE CONDITIONS REQUIRED.

PRELIMINARY
NOT FOR
CONSTRUCTION

N

Power Secure
Solar Energy Solutions
1609 Heritage Commerce Ct.
Wake Forest, NC 27587

THIS LINE SHOULD MEASURE ONE INCH

REV.	DATE	DESCRIPTION

TITLE: SITE PLAN – ARRAY GROUNDING
PROJECT: SUNDA REFERENCE DESIGN 250KW – 1,000Vdc
NRECA
DATE: 02.06.2015
SHEET: PV1.5

Plot Date:2/16/2015

GENERAL NOTES:

1. USE COMPRESSION LUGS WITH BELLEVILLE WASHERS ON AC AND DC FEEDERS WITHIN INVERTER.
2. PROVIDE LABELS TO EACH INCOMING CIRCUIT IN THE INVERTER.
3. PROVIDE LIQUID TIGHT BONDING HUB ASSEMBLY PER MANUFACTURE RECOMMENDATION ON EXTERIOR OF ENCLOSURE AT EACH CONDUIT PENETRATION FOR ENCLOSURES EXPOSED TO ELEMENTS.
4. PROVIDE ANTIOXIDANT CORROSION INHIBITOR FOR APPLICATION ON ALL LISTED CONNECTIONS.
5. PROVIDE IRREVERSIBLE BONDS AT ALL GROUNDING ELECTRODE CONDUCTORS.

EQUIPMENT SCHEDULE
**EQUIPMENT IS NOTED BY 8

TAG	DESCRIPTION	QUANTITY	DESCRIPTION
1	SOLAR PV MODULE	1026	305 WATT MODULE (REFER TO DRAWINGS FOR QUANTITY AND LOCATION). MODULES SHALL BE LABELED PER NEC 690 VI.
2	INVERTER	11	23.2 KWATT, 3 PHASE 480 VOLT 4 WIRE & GROUND (REFER TO INVERTER RATING SCHEDULE FOR SPECIFICATION)
3	AC DISCONNECT	11	60 AMP 3 POLE FUSED DISCONNECT WITH (3) 35 AMP FUSES, NEMA 12 ENCLOSURE WITHOUT KNOCKOUTS, DRAIN SCREW MUST BE REMOVED TO MAINTAIN OUTDOOR RATING. PROVIDE STICKER LABEL TO BE VISIBLE WHEN FUSE IS REMOVED TO READ "MAX 35A". SUITABLE FOR SERVICE ENTRANCE WHEN PROVIDED WITH NEUTRAL ASSEMBLY KIT AND EQUIPMENT GROUNDING KIT.
4	PANEL PV-1	1	800 AMP BUS WITH MAIN LUGS ONLY. REFER TO PANEL SCHEDULE FOR ADDITIONAL SPECIFICATIONS.
5	MEDIUM VOLTAGE TRANSFORMER	1	250KVA, THREE PHASE, 12.47KV YGRD/7.2KV PRIMARY AND 480V WYE SECONDARY, LIQUID COOLED TRANSFORMER, BAYONET FUSES ON PRIMARY SIDE. REQUIRED TO MEET UTILITY REQUIREMENTS.
6	DISTRIBUTION TRANSFORMER	1	2KVA THREE PHASE GENERAL PURPOSE DRY TYPE TRANSFORMER, PRIMARY VOLTS 480 VAC, SECONDARY VOLTS 208/120 VAC, NEMA 3R ENCAPSULATED ENCLOSURE
7	PANEL PV-A	1	PV AUXILIARY POWER PANEL, 100 AMP BUS WITH 15 AMP MAIN CIRCUIT BREAKER. REFER TO PANEL SCHEDULE FOR ADDITIONAL SPECIFICATIONS.
8	PV PRODUCTION MONITORING SYSTEM	1	CENTRAL DATA ACQUISITION UNIT, NEMA 3R ENCLOSURE WITH BATTERY BACK UP, LOCAL DATA STORAGE, INTEGRAL EHTERNET COMMUNICATIONS , WEB BASED DISPLAY AND LOCAL KEYPAD DISPLAY, PROVIDE 120V 1ϕ POWER SUPPLY
9	PHOTOVOLTAIC MONITORING METEOROLOGICAL STATION	1	STATION INCLUDES: REFERENC CELL FOR PYRANOMETER - PLANE OF ARRAY, BACK OF MODULE TEMPERATURE SENSOR WEATHER STATION FOR AMBIENT TEMPERATURE, WIND, AND RAIN SENSORS
10	PHOTOVOLTAIC PRODUCTION METER	1	REVENUE GRADE METER IN NEMA 3R ENCLOSURE PROVIDED AS PART OF THE MONITORING SYSTEM. PROVIDE 120V 1ϕ POWER SUPPLY.
11	RECEPTACLE	1	120V, 20 AMP, WEATHER PROOF GFI DUPLEX RECEPTACLE.
12	SERVICE DISCONNECT	1	400 AMP 3 POLE FUSED DISCONNECT WITH (3) 400 AMP FUSES, NEMA 12 ENCLOSURE WITHOUT KNOCKOUTS, DRAIN SCREW MUST BE REMOVED TO MAINTAIN OUTDOOR RATING. PROVIDE STICKER LABEL TO BE VISIBLE WHEN FUSE IS REMOVED TO READ "MAX 400A". SUITABLE FOR SERVICE ENTRANCE WHEN PROVIDED WITH NEUTRAL ASSEMBLY KIT AND EQUIPMENT GROUNDING KIT.
13	MEDIUM VOLTAGE FUSED SWITCH	1	15KV PAD MOUNTED SWITCH, WITH 60A STANDARD SPEED FUSES
14	COORDINATED POLE MOUNTED SWITCH	1	SWITCH TO MEET THE REQUIREMENTS OF THE UTILITY
15	GROUND ROD	3	3/4" DIAMETER, 10'-0" LONG COPPER CLAD GROUND ROD

FEEDER SCHEDULE
**FEEDER IS NOTED BY α

TAG	CONDUCTOR TYPE	CONDUCTOR TYPE	INSULATION TYPE	GROUND SIZE	GROUND TYPE	GROUND INSULATION TYPE	RACEWAY SIZE	RACEWAY QUANTITY NOTE 2
A8	(8) #10 PER RACEWAY	COPPER	PV	(1) #10 PER RACEWAY	COPPER	PV	1-1/4" NOTE 5	(1)
A10	(10) #10 PER RACEWAY	COPPER	PV	(1) #10 PER RACEWAY	COPPER	PV	1-1/2" NOTE 5	(1)
B	(3) #8 PER RACEWAY	COPPER	THWN-2	(1) #10 PER RACEWAY	COPPER	THWN-2	1"	(1)
	(1) #8 PER RACEWAY	COPPER	THWN-2					
C	(3) 300 KCMIL PER RACEWAY	ALUMINUM	THWN-2	(1) #3 PER RACEWAY	COPPER	THWN-2	3"	(2)
	(1) 300 KCMIL PER RACEWAY	ALUMINUM	THWN-2					
D	(3) 300 KCMIL PER RACEWAY	ALUMINUM	THWN-2				3"	(2)
	(1) 300 KCMIL PER RACEWAY	ALUMINUM	THWN-2					
E NOTE 6	(3) #1/0 PER RACEWAY	ALUMINUM	MV TR-XLPE WITH CONCENTRIC NEUTRAL				4"	(1)
F	BLENDEN#30B4A						3/4"	(1)
G	MANUFACTURER PROVIDED WHIP						1-1/4"	(1)
H	(3) #12 PER RACEWAY	COPPER	THWN-2	(1) #12 PER RACEWAY	COPPER	THWN-2	3/4"	(1)
	(1) #12 PER RACEWAY	COPPER	THWN-2					
I	(3) #12 PER RACEWAY	COPPER	THWN-2	(1) #12 PER RACEWAY	COPPER	THWN-2	3/4"	(1)
J	(1) #12 PER RACEWAY	COPPER	THWN-2	(1) #12 PER RACEWAY	COPPER	THWN-2	3/4"	(1)
	(1) #12 PER RACEWAY	COPPER	THWN-2					
K				(1) #3 PER RACEWAY	COPPER	THWN-2	3/4"	(1)
L				(1) #1/0 PER RACEWAY	COPPER	BARE		

NOTES:
1. (#) - DENOTES QUANTITY TO BE PROVIDED
2. WHERE MULTIPLE CONDUITS ARE NOTED, THE RACEWAYS SHALL BE PROVIDED IN PARALLEL.
3. REFER TO RACEWAY APPLICATION SCHEDULE FOR RACEWAY TYPE.
4. ALL RACEWAY SIZES ARE NEC MINIMUM REQUIREMENTS, LARGER CONDUITS ARE PERMITED FOR EASE OF INSTALLATION.
5. PV SOURCE CIRCUITS SHALL NOT BE REQUIRED TO BE IN RACEWAY IF CONDUCTORS ARE NOT READILY ACCESSIBLE AND NOT EXPOSED TO PHYSICAL DAMAGE. BELOW GRADE PV SOURCE CIRCUITS SHALL BE IN RACEWAY.
6. PROVIDE 15KV MEDIUM VOLTGE FEEDERS WITH 100% INSULATION.

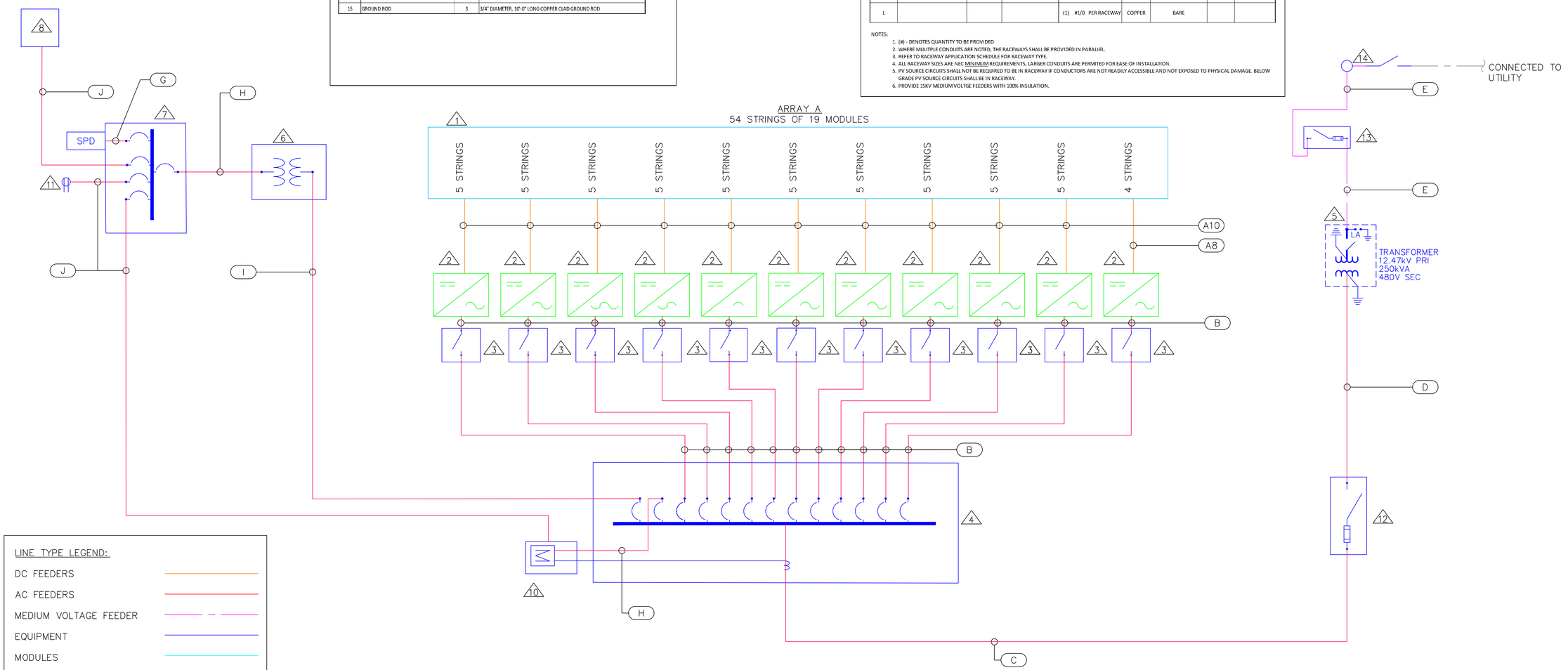

LINE TYPE LEGEND:
- DC FEEDERS
- AC FEEDERS
- MEDIUM VOLTAGE FEEDER
- EQUIPMENT
- MODULES
- PROVIDED BY OTHERS

PRELIMINARY
NOT FOR
CONSTRUCTION

Power Secure
Solar Energy Solutions
1609 Heritage Commerce Ct.
Wake Forest, NC 27587

THIS LINE SHOULD MEASURE ONE INCH

REV.	DATE	DESCRIPTION

TITLE: PV SINGLE LINE DIAGRAM

PROJECT: NRECA SUNDA REFERENCE DESIGN 250KW – 1,000Vdc

DATE: 02.06.2015

SHEET: PV2.0

Bid Dated 7/16/2015

EQUIPMENT SCHEDULE

**EQUIPMENT IS NOTED BY #

TAG	DESCRIPTION	QUANTITY	DESCRIPTION
1	SOLAR PV MODULE	1026	305 WATT MODULE (REFER TO DRAWINGS FOR QUANTITY AND LOCATION). MODULES SHALL BE LABELED PER NEC 690 VI.
2	INVERTER	11	23.2 KWATT, 3 PHASE 480 VOLT 4 WIRE & GROUND (REFER TO INVERTER RATING SCHEDULE FOR SPECIFICATION)
3	AC DISCONNECT	11	60 AMP 3 POLE FUSED DISCONNECT WITH (3) 35 AMP FUSES, NEMA 12 ENCLOSURE WITHOUT KNOCKOUTS, DRAIN SCREW MUST BE REMOVED TO MAINTAIN OUTDOOR RATING. PROVIDE STICKER LABEL TO BE VISIBLE WHEN FUSE IS REMOVED TO READ "MAX 35A". SUITABLE FOR SERVICE ENTRANCE WHEN PROVIDED WITH NEUTRAL ASSEMBLY KIT AND EQUIPMENT GROUNDING KIT.
4	PANEL PV-1	1	800 AMP BUS WITH MAIN LUGS ONLY. REFER TO PANEL SCHEDULE FOR ADDITIONAL SPECIFICATIONS.
5	MEDIUM VOLTAGE TRANSFORMER	1	250KVA, THREE PHASE, 12.47KV YGRD/7.2KV PRIMARY AND 480V WYE SECONDARY, LIQUID COOLED TRANSFORMER, BAYONET FUSES ON PRIMARY SIDE. REQUIRED TO MEET UTILITY REQUIREMENTS.
6	DISTRIBUTION TRANSFORMER	1	2KVA THREE PHASE GENERAL PURPOSE DRY TYPE TRANSFORMER, PRIMARY VOLTS 480 VAC, SECONDARY VOLTS 208/120 VAC, NEMA 3R ENCAPSULATED ENCLOSURE
7	PANEL PV-A	1	PV AUXILIARY POWER PANEL, 100 AMP BUS WITH 15 AMP MAIN CIRCUIT BREAKER. REFER TO PANEL SCHEDULE FOR ADDITIONAL SPECIFICATIONS.
8	PV PRODUCTION MONITORING SYSTEM	1	CENTRAL DATA ACQUISITION UNIT, NEMA 3R ENCLOSURE WITH BATTERY BACK UP, LOCAL DATA STORAGE, INTEGRAL EHTERNET COMMUNICATIONS , WEB BASED DISPLAY AND LOCAL KEYPAD DISPLAY, PROVIDE 120V 1ϕ POWER SUPPLY
9	PHOTOVOLTAIC MONITORING METEOROLOGICAL STATION	1	STATION INCLUDES: REFERENC CELL FOR PYRANOMETER - PLANE OF ARRAY, BACK OF MODULE TEMPERATURE SENSOR WEATHER STATION FOR AMBIENT TEMPERATURE, WIND, AND RAIN SENSORS
10	PHOTOVOLTAIC PRODUCTION METER	1	REVENUE GRADE METER IN NEMA 3R ENCLOSURE PROVIDED AS PART OF THE MONITORING SYSTEM, PROVIDE 120V 1ϕ POWER SUPPLY.
11	RECEPTACLE	1	120V, 20 AMP, WEATHER PROOF GFI DUPLEX RECEPTACLE.
12	SERVICE DISCONNECT	1	400 AMP 3 POLE FUSED DISCONNECT WITH (3) 400 AMP FUSES, NEMA 12 ENCLOSURE WITHOUT KNOCKOUTS, DRAIN SCREW MUST BE REMOVED TO MAINTAIN OUTDOOR RATING. PROVIDE STICKER LABEL TO BE VISIBLE WHEN FUSE IS REMOVED TO READ "MAX 400A". SUITABLE FOR SERVICE ENTRANCE WHEN PROVIDED WITH NEUTRAL ASSEMBLY KIT AND EQUIPMENT GROUNDING KIT.
13	MEDIUM VOLTAGE FUSED SWITCH	1	15KV PAD MOUNTED SWITCH, WITH 60A STANDARD SPEED FUSES
14	COORDINATED POLE MOUNTED SWITCH	1	SWITCH TO MEET THE REQUIREMENTS OF THE UTILITY
15	GROUND ROD	3	3/4" DIAMETER, 10'-0" LONG COPPER CLAD GROUND ROD

MINIMUM CONDUIT REQUIRED PER APPLICATION

APPLICATION	CONDUIT TYPE
ROOF MOUNTED (EXPOSED)	RGS
BUILDING INTERIOR (EXPOSED TO PHYSICAL DAMAGE)	RGS
BUILDING INTERIOR (PROTECTED FROM PHYSICAL DAMAGE)	EMT
BUILDING EXTERIOR (EXPOSED TO PHYSICAL DAMAGE)	RGS
BUILDING EXTERIOR (PROTECTED FROM PHYSICAL DAMAGE)	RGS
BELOW GRADE (IN DIRECT CONTACT WITH EARTH)	PVC SCHED 40
TRANSITION FROM BELOW GRADE TO ABOVE GRADE	RGS OR PV SCHED 80

FEEDER SCHEDULE

**FEEDER IS NOTED BY α

TAG	CONDUCTOR TYPE	CONDUCTOR TYPE	INSULATION TYPE	GROUND SIZE	GROUND TYPE	GROUND INSULATION TYPE	RACEWAY SIZE	RACEWAY QUANTITY NOTE2
A8	(8) #10 PER RACEWAY	COPPER	PV	(1) #10 PER RACEWAY	COPPER	PV	1-1/4" NOTE5	(1)
A10	(10) #10 PER RACEWAY	COPPER	PV	(1) #10 PER RACEWAY	COPPER	PV	1-1/2" NOTE5	(1)
B	(3) #8 PER RACEWAY	COPPER	THWN-2	(1) #10 PER RACEWAY	COPPER	THWN-2	1"	(1)
	(1) #8 PER RACEWAY	COPPER	THWN-2					
C	(3) 300 KCMIL PER RACEWAY	ALUMINUM	THWN-2	(1) #3 PER RACEWAY	COPPER	THWN-2	3"	(2)
	(1) 300 KCMIL PER RACEWAY	ALUMINUM	THWN-2					
D	(3) 300 KCMIL PER RACEWAY	ALUMINUM	THWN-2				3"	(2)
	(1) 300 KCMIL PER RACEWAY	ALUMINUM	THWN-2					
E NOTE6	(3) #1/0 PER RACEWAY	ALUMINUM	MV TR-XLPE WITH CONCENTRIC NEUTRAL				4"	(1)
F	BLENDEN#3084A						3/4"	(1)
G	MANUFACTURER PROVIDED WHIP						1-1/4"	(1)
H	(3) #12 PER RACEWAY	COPPER	THWN-2	(1) #12 PER RACEWAY	COPPER	THWN-2	3/4"	(1)
	(1) #12 PER RACEWAY	COPPER	THWN-2					
I	(3) #12 PER RACEWAY	COPPER	THWN-2	(1) #12 PER RACEWAY	COPPER	THWN-2	3/4"	(1)
J	(1) #12 PER RACEWAY	COPPER	THWN-2	(1) #12 PER RACEWAY	COPPER	THWN-2	3/4"	(1)
	(1) #12 PER RACEWAY	COPPER	THWN-2					
K				(1) #3 PER RACEWAY	COPPER	THWN-2	3/4"	(1)
L				(1) #1/0 PER RACEWAY	COPPER	BARE		

NOTES:

1. (#) - DENOTES QUANTITY TO BE PROVIDED
2. WHERE MULITPLE CONDUITS ARE NOTED, THE RACEWAYS SHALL BE PROVIDED IN PARALLEL.
3. REFER TO RACEWAY APPLICATION SCHEDULE FOR RACEWAY TYPE.
4. ALL RACEWAY SIZES ARE NEC MINIMUM REQUIREMENTS, LARGER CONDUITS ARE PERMITED FOR EASE OF INSTALLATION.
5. PV SOURCE CIRCUITS SHALL NOT BE REQUIRED TO BE IN RACEWAY IF CONDUCTORS ARE NOT READILY ACCESSIBLE AND NOT EXPOSED TO PHYSICAL DAMAGE. BELOW GRADE PV SOURCE CIRCUITS SHALL BE IN RACEWAY.
6. PROVIDE 15KV MEDIUM VOLTGE FEEDERS WITH 100% INSULATION.

PANEL PV-1

SERVICE SUPPLY: 480V, 3ϕ, 4 WIRE
BUS: 800 AMP
MAIN: MAIN LUG ONLY
FEEDER: REFER TO SINGLE LINE DIAGRAM
AIC RATING: 35,000

NOTES:
1. PROVIDE COPPER BUSSING
2. PROVIDE NEMA 3R ENCLOSURE
3. BUS SIZED PER NEC 705.12(D)

kVA A	kVA B	kVA C		COND	GND	NEU	PH			Ø	Ø				PH	NEU	GND	COND		kVA A	kVA B	kVA C
7.73			AE 3TL INVERTER 1	REFER TO SINGLE LINE DIAGRAM				35/3	1	A	A	2	35/3	REFER TO SINGLE LINE DIAGRAM					AE 3TL INVERTER 6	7.73		
	7.73								3	B	B	4									7.73	
		7.73							5	C	C	6										7.73
7.73			AE 3TL INVERTER 2	REFER TO SINGLE LINE DIAGRAM				35/3	7	A	A	8	35/3	REFER TO SINGLE LINE DIAGRAM					AE 3TL INVERTER 7	7.73		
	7.73								9	B	B	10									7.73	
		7.73							11	C	C	12										7.73
7.73			AE 3TL INVERTER 3	REFER TO SINGLE LINE DIAGRAM				35/3	13	A	A	14	35/3	REFER TO SINGLE LINE DIAGRAM					AE 3TL INVERTER 8	7.73		
	7.73								15	B	B	16									7.73	
		7.73							17	C	C	18										7.73
7.73			AE 3TL INVERTER 4	REFER TO SINGLE LINE DIAGRAM				35/3	19	A	A	20	35/3	REFER TO SINGLE LINE DIAGRAM					AE 3TL INVERTER 9	7.73		
	7.73								21	B	B	22									7.73	
		7.73							23	C	C	24										7.73
7.73			AE 3TL INVERTER 5	REFER TO SINGLE LINE DIAGRAM				35/3	25	A	A	26	35/3	REFER TO SINGLE LINE DIAGRAM					AE 3TL INVERTER 10	7.73		
	7.73								27	B	B	28									7.73	
		7.73							29	C	C	30										7.73
0.99			AUXILIARY POWER PANEL VIA 2KVA TRANSFORMER	REFER TO SINGLE LINE DIAGRAM				15/3	31	A	A	32	35/3	REFER TO SINGLE LINE DIAGRAM					AE 3TL INVERTER 11	7.73		
	0.68								33	B	B	34									7.73	
		0.68							35	C	C	36										7.73
			PV PRODUCTION METER VOLTAGE REFERENCE	REFER TO SINGLE LINE DIAGRAM				15/3	37	A	A	38										
									39	B	B	40										
									41	C	C	42										
39.6	39.3	39.3																		46.38	46.38	46.38
																			TOTAL CONNECTED LOAD (kVA)	86.02	85.71	85.71
																			TOTAL CONNECTED LOAD (A)	310.6	309.4	309.4

INVERTER DESIGNATION	A1-A11
INVERTER QUANTITY	11
INVERTER MAKE	ADVANCED_ENERGY
INVERTER MODEL	AE3TL-23.2-1KV
INVERTER TYPE	UNGROUNDED
MAX DC VOLTAGE RATING	1000
MAX POWER @ 40°C	23 KW
NOMINAL AC VOLTAGE	480, 3ϕ
MAX AC OUTPUT CURRENT	28 A
MAX OCPD	35 A
MIN V_{MP}	600 V
MAX V_{MP}	900 V
START UP VOLTAGE	200 V
ENCLOSURE RATING	NEMA 3R
INTEGRATED DC DISCONNECT	NO
INTEGRATED DC FUSING	YES
INTEGRATED AC DISCONNECT	NO

MODULE MANUFACTURER	REC
MODULE MODEL NUMBER	REC305PE72
MAX POWER (P_{MAX})	305 W
CELLS	MULTICRYSTALLINE
FRAME	SILVER
MAX POWER-POINT CURRENT (I_{MP})	8.42 A
MAX POWER-POINT VOLTAGE (V_{MP})	36.60 V
OPEN CIRCUIT VOLTAGE (V_{OC})	45.10 V
SHORT CIRCUIT CURRENT (I_{SC})	8.95 A
MAX SERIES FUSE (OCPD)	20 A
MAX VOLTAGE (V_{DC})	1000
V_{OC} TEMP COEFF (%/°C)	-0.27
CONNECTOR	MC4 OR EQUIVALENT
MANUFACTURER RECOMMENDED GROUND	WEEB CLIP
WEEB CLIP QUANTITY	2,052

PANEL PV-A

SERVICE SUPPLY: 208V, 3ϕ, 4 WIRE
BUS: 100 AMP
MAIN: 15 AMP MAIN CIRCUIT BREAKER
FEEDER: REFER TO SINGLE LINE DIAGRAM
AIC RATING: 22,000

NOTES:
1. PROVIDE COPPER BUSSING
2. MAIN CIRCUIT BREAKER WITH ADAPTER
3. SURGE PROTECTION DEVICE SHALL BE THE FIRST DEVICE TO DETECT A SURGE COMING FROM THE MAIN. CONFIGURATION SHOWN FOR BOTTOM ENTRY PANEL. FOR TOP ENTRY PANEL LOCATE SPD IN SPACES 2,4,6.
4. PROVIDE NEMA 3R ENCLOSURE

VA A	VA B	VA C		COND	GND	NEU	PH			Ø	Ø				PH	NEU	GND	COND		VA A	VA B	VA C
			SPACE	-	-	-	-	20/1	1	A	A	2	20/1	12	12	12	3/4"	RECEPTACLE			180	0
			SPACE	-	-	-	-	20/1	3	B	B	4	-	-	-	-	-	SPACE				
			SPACE	-	-	-	-	20/1	5	C	C	6	-	-	-	-	-	SPACE				
			SPACE	-	-	-	-	20/1	7	A	A	8	20/1	12	12	12	3/4"	GROUND FAULT DETECTION SYSTEM	630			
			SPACE	-	-	-	-	20/1	9	B	B	10	20/1	12	12	12	3/4"	PV MONITORING SYSTEM			500	
			SPACE	-	-	-	-	20/1	11	C	C	12	20/1	12	12	12	3/4"	METER POWER SUPPLY				500
				-	-	-	-		13	A	A	14		12	-							
			MAIN CIRCUIT BREAKER	-	-	-	-	15/3	15	B	B	16	20/3	12	-	12	3/4"	SURGE PROTECTION DEVICE				
				-	-	-	-		17	C	C	18		12	-							
0	0	0																		630	680	500
																		TOTAL CONNECTED LOAD (VA)		630	680	500
																		TOTAL CONNECTED LOAD (A)		5.25	5.667	4.167

PRELIMINARY
NOT FOR
CONSTRUCTION

Power Secure
Solar Energy Solutions
1609 Heritage Commerce Ct.
Wake Forest, NC 27587

THIS LINE SHOULD MEASURE ONE INCH

REV.	DATE	DESCRIPTION

PV SCHEDULES

TITLE:

PROJECT:
NRECA
SUNDA REFERENCE DESIGN
250KW – 1,000VDc

DATE:
02.06.2015
SHEET:
PV2.1

Plot Date:2/16/2015

EQUIPMENT SCHEDULE

**EQUIPMENT IS NOTED BY #

TAG	DESCRIPTION	QUANTITY	DESCRIPTION
1	SOLAR PV MODULE	1026	305 WATT MODULE (REFER TO DRAWINGS FOR QUANTITY AND LOCATION). MODULES SHALL BE LABELED PER NEC 690 VI.
2	INVERTER	11	23.2 KWATT, 3 PHASE 480 VOLT 4 WIRE & GROUND (REFER TO INVERTER RATING SCHEDULE FOR SPECIFICATION)
3	AC DISCONNECT	11	60 AMP 3 POLE FUSED DISCONNECT WITH (3) 35 AMP FUSES, NEMA 12 ENCLOSURE WITHOUT KNOCKOUTS, DRAIN SCREW MUST BE REMOVED TO MAINTAIN OUTDOOR RATING. PROVIDE STICKER LABEL TO BE VISIBLE WHEN FUSE IS REMOVED TO READ "MAX 35A". SUITABLE FOR SERVICE ENTRANCE WHEN PROVIDED WITH NEUTRAL ASSEMBLY KIT AND EQUIPMENT GROUNDING KIT.
4	PANEL PV-1	1	800 AMP BUS WITH MAIN LUGS ONLY. REFER TO PANEL SCHEDULE FOR ADDITIONAL SPECIFICATIONS.
5	MEDIUM VOLTAGE TRANSFORMER	1	250KVA, THREE PHASE, 12.47KV YGRD/7.2KV PRIMARY AND 480V WYE SECONDARY, LIQUID COOLED TRANSFORMER, BAYONET FUSES ON PRIMARY SIDE. REQUIRED TO MEET UTILITY REQUIREMENTS.
6	DISTRIBUTION TRANSFORMER	1	2KVA THREE PHASE GENERAL PURPOSE DRY TYPE TRANSFORMER, PRIMARY VOLTS 480 VAC, SECONDARY VOLTS 208/120 VAC, NEMA 3R ENCAPSULATED ENCLOSURE
7	PANEL PV-A	1	PV AUXILIARY POWER PANEL, 100 AMP BUS WITH 15 AMP MAIN CIRCUIT BREAKER. REFER TO PANEL SCHEDULE FOR ADDITIONAL SPECIFICATIONS.
8	PV PRODUCTION MONITORING SYSTEM	1	CENTRAL DATA ACQUISITION UNIT, NEMA 3R ENCLOSURE WITH BATTERY BACK UP, LOCAL DATA STORAGE, INTEGRAL EHTERNET COMMUNICATIONS , WEB BASED DISPLAY AND LOCAL KEYPAD DISPLAY, PROVIDE 120V 1ϕ POWER SUPPLY
9	PHOTOVOLTAIC MONITORING METEOROLOGICAL STATION	1	STATION INCLUDES: REFERENC CELL FOR PYRANOMETER - PLANE OF ARRAY, BACK OF MODULE TEMPERATURE SENSOR WEATHER STATION FOR AMBIENT TEMPERATURE, WIND, AND RAIN SENSORS
10	PHOTOVOLTAIC PRODUCTION METER	1	REVENUE GRADE METER IN NEMA 3R ENCLOSURE PROVIDED AS PART OF THE MONITORING SYSTEM, PROVIDE 120V 1ϕ POWER SUPPLY.
11	RECEPTACLE	1	120V, 20 AMP, WEATHER PROOF GFI DUPLEX RECEPTACLE.
12	SERVICE DISCONNECT	1	400 AMP 3 POLE FUSED DISCONNECT WITH (3) 400 AMP FUSES, NEMA 12 ENCLOSURE WITHOUT KNOCKOUTS, DRAIN SCREW MUST BE REMOVED TO MAINTAIN OUTDOOR RATING. PROVIDE STICKER LABEL TO BE VISIBLE WHEN FUSE IS REMOVED TO READ "MAX 400A". SUITABLE FOR SERVICE ENTRANCE WHEN PROVIDED WITH NEUTRAL ASSEMBLY KIT AND EQUIPMENT GROUNDING KIT.
13	MEDIUM VOLTAGE FUSED SWITCH	1	15KV PAD MOUNTED SWITCH, WITH 60A STANDARD SPEED FUSES
14	COORDINATED POLE MOUNTED SWITCH	1	SWITCH TO MEET THE REQUIREMENTS OF THE UTILITY
15	GROUND ROD	3	3/4" DIAMETER, 10'-0" LONG COPPER CLAD GROUND ROD

LINE TYPE LEGEND

CONCRETE PAD

EQUIPMENT

CONDUIT WINDOW

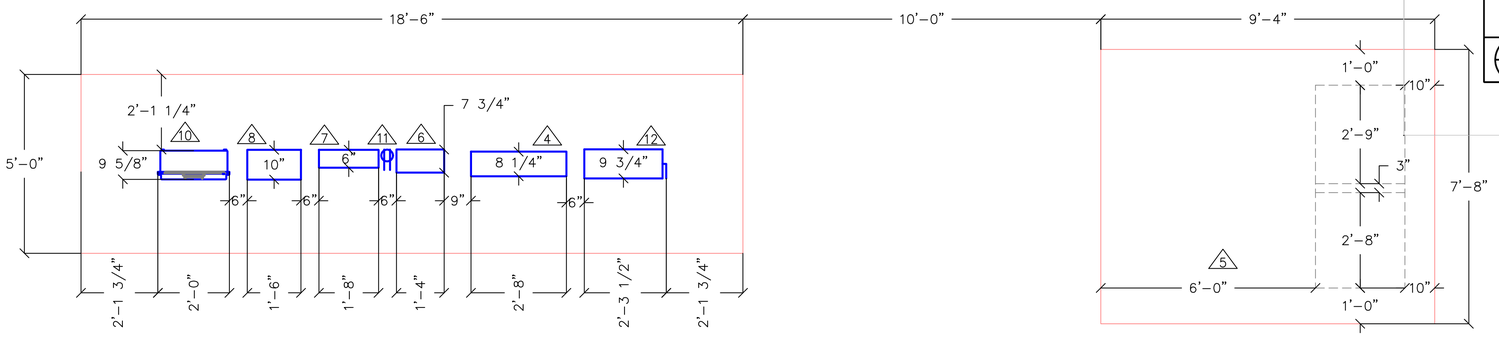

1 PARTIAL PLAN – EQUIPMENT PAD DIMENSIONS
SCALE: 1/2"=1'-0"

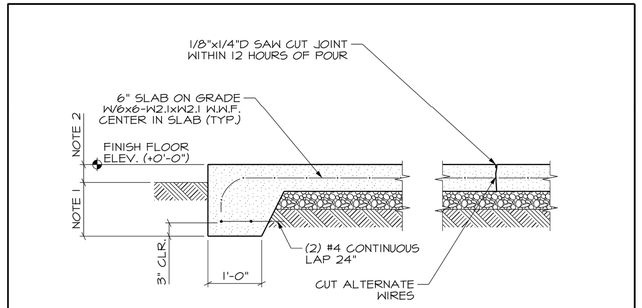

NORTH CAROLINA PROFESSIONAL SEAL 05/07/13 DOUGLAS W. SCHOONOVER ENGINEER

NOTES:
1. MINIMUM DEPTH IS FROST DEPTH AT PROJECT SITE.
2. COORDINATE WITH SITE GRADING.
3. SEE INVERTER PLAN FOR EQUIPMENT LAYOUT AND SIZE.
4. CONCRETE IS 3000 PSI NORMAL WEIGHT.
5. PROVIDE CONTROL JOINTS TO DIVIDE SLAB INTO APPROXIMATELY SQUARE SECTIONS. MAXIMUM SPACING AND SIZE ABOUT 25'-0".

1 / S1 TYPICAL TURNED DOWN SLAB
3/4"=1'-0"

PRELIMINARY NOT FOR CONSTRUCTION

N

Power Secure Solar Energy Solutions
1609 Heritage Commerce Ct.
Wake Forest, NC 27587

THIS LINE SHOULD MEASURE ONE INCH

REV.	DATE	DESCRIPTION

TITLE: PARTIAL PLAN – EQUIPMENT PAD DIMENSIONS

PROJECT: NRECA SUNDA REFERENCE DESIGN 250KW – 1,000Vdc

DATE: 02.06.2015

SHEET: PV3.0

Plot Date:2/16/2015

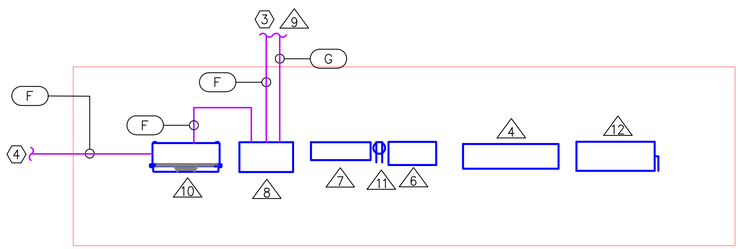

1 PARTIAL PLAN COMMUNICATION FEEDER ROUTING
SCALE: 1/2"=1'-0"

KEYED NOTES: X

1. TO INVERTERS, REFER TO AC ROUTING FOR CONTINUATION
2. TO MEDIUM VOLTAGE SWITCH. REFER TO MEDIUM VOLTAGE ROUTING FOR CONTINUATION.
3. TO BACK OF MODULE TEMPERATURE SENSOR. REFER TO MANUFACTURER RECOMMENDATION.
4. PROVIDE DAISY CHAIN TO INVERTERS.

LINE TYPE LEGEND

DC FEEDER
AC FEEDER
COMMUNICATIONS
MV FEEDER

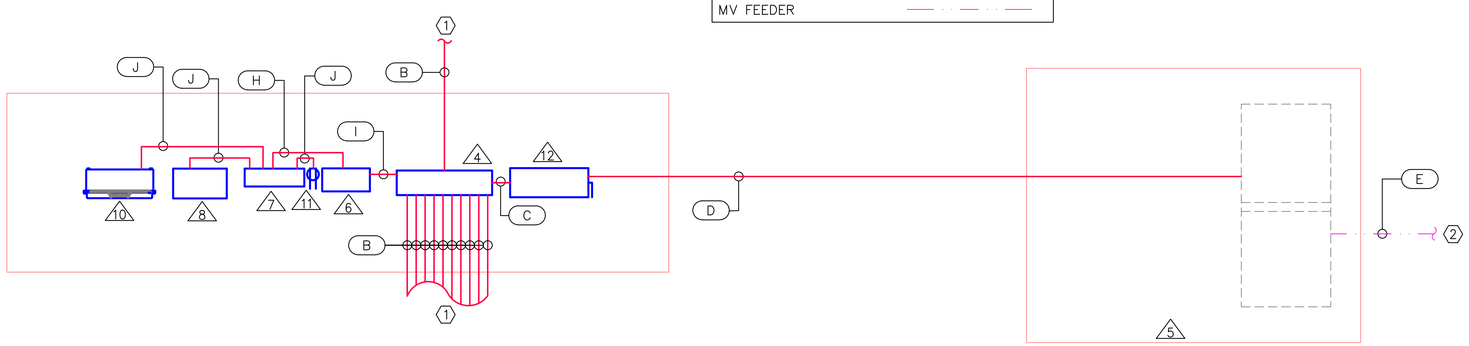

2 PARTIAL PLAN – AC FEEDER ROUTING
SCALE: 1/2"=1'-0"

FEEDER SCHEDULE
**FEEDER IS NOTED BY α

TAG	CONDUCTOR TYPE	CONDUCTOR TYPE	INSULATION TYPE	GROUND SIZE	GROUND TYPE	GROUND INSULATION TYPE	RACEWAY SIZE	RACEWAY QUANTITY NOTE7
A8	(8) #10 PER RACEWAY	COPPER	PV	(1) #10 PER RACEWAY	COPPER	PV	1-1/4" NOTE5	(1)
A10	(10) #10 PER RACEWAY	COPPER	PV	(1) #10 PER RACEWAY	COPPER	PV	1-1/2" NOTE5	(1)
B	(3) #8 PER RACEWAY	COPPER	THWN-2	(1) #10 PER RACEWAY	COPPER	THWN-2	1"	(1)
	(1) #8 PER RACEWAY	COPPER	THWN-2					
C	(3) 300 KCMIL PER RACEWAY	ALUMINUM	THWN-2	(1) #3 PER RACEWAY	COPPER	THWN-2	3"	(2)
	(1) 300 KCMIL PER RACEWAY	ALUMINUM	THWN-2					
D	(3) 300 KCMIL PER RACEWAY	ALUMINUM	THWN-2				3"	(2)
	(1) 300 KCMIL PER RACEWAY	ALUMINUM	THWN-2					
E NOTE6	(3) #1/0 PER RACEWAY	ALUMINUM	MV TR-XLPE WITH CONCENTRIC NEUTRAL				4"	(1)
F	BLENDEN#3084A						3/4"	(1)
G	MANUFACTURER PROVIDED WHIP						1-1/4"	(1)
H	(3) #12 PER RACEWAY	COPPER	THWN-2	(1) #12 PER RACEWAY	COPPER	THWN-2	3/4"	(1)
	(1) #12 PER RACEWAY	COPPER	THWN-2					
I	(3) #12 PER RACEWAY	COPPER	THWN-2	(1) #12 PER RACEWAY	COPPER	THWN-2	3/4"	(1)
J	(1) #12 PER RACEWAY	COPPER	THWN-2	(1) #12 PER RACEWAY	COPPER	THWN-2	3/4"	(1)
	(1) #12 PER RACEWAY	COPPER	THWN-2					
K				(1) #3 PER RACEWAY	COPPER	THWN-2	3/4"	(1)
L				(1) #1/0 PER RACEWAY	COPPER	BARE		

NOTES:
1. (#) - DENOTES QUANTITY TO BE PROVIDED
2. WHERE MULITPLE CONDUITS ARE NOTED, THE RACEWAYS SHALL BE PROVIDED IN PARALLEL.
3. REFER TO RACEWAY APPLICATION SCHEDULE FOR RACEWAY TYPE.
4. ALL RACEWAY SIZES ARE NEC MINIMUM REQUIREMENTS, LARGER CONDUITS ARE PERMITED FOR EASE OF INSTALLATION.
5. PV SOURCE CIRCUITS SHALL NOT BE REQUIRED TO BE IN RACEWAY IF CONDUCTORS ARE NOT READILY ACCESSIBLE AND NOT EXPOSED TO PHYSICAL DAMAGE. BELOW GRADE PV SOURCE CIRCUITS SHALL BE IN RACEWAY.
6. PROVIDE 15KV MEDIUM VOLTGE FEEDERS WITH 100% INSULATION.

EQUIPMENT SCHEDULE
**EQUIPMENT IS NOTED BY #

TAG	DESCRIPTION	QUANTITY	DESCRIPTION
1	SOLAR PV MODULE	1026	305 WATT MODULE (REFER TO DRAWINGS FOR QUANTITY AND LOCATION). MODULES SHALL BE LABELED PER NEC 690 VI.
2	INVERTER	11	23.2 KWATT, 3 PHASE 480 VOLT 4 WIRE & GROUND (REFER TO INVERTER RATING SCHEDULE FOR SPECIFICATION)
3	AC DISCONNECT	11	60 AMP 3 POLE FUSED DISCONNECT WITH (3) 35 AMP FUSES, NEMA 12 ENCLOSURE WITHOUT KNOCKOUTS, DRAIN SCREW MUST BE REMOVED TO MAINTAIN OUTDOOR RATING. PROVIDE STICKER LABEL TO BE VISIBLE WHEN FUSE IS REMOVED TO READ "MAX 35A". SUITABLE FOR SERVICE ENTRANCE WHEN PROVIDED WITH NEUTRAL ASSEMBLY KIT AND EQUIPMENT GROUNDING KIT.
4	PANEL PV-1	1	800 AMP BUS WITH MAIN LUGS ONLY. REFER TO PANEL SCHEDULE FOR ADDITIONAL SPECIFICATIONS.
5	MEDIUM VOLTAGE TRANSFORMER	1	250KVA, THREE PHASE, 12.47KV YGRD/7.2KV PRIMARY AND 480V WYE SECONDARY, LIQUID COOLED TRANSFORMER, BAYONET FUSES ON PRIMARY SIDE. REQUIRED TO MEET UTILITY REQUIREMENTS.
6	DISTRIBUTION TRANSFORMER	1	2KVA THREE PHASE GENERAL PURPOSE DRY TYPE TRANSFORMER, PRIMARY VOLTS 480 VAC, SECONDARY VOLTS 208/120 VAC, NEMA 3R ENCAPSULATED ENCLOSURE
7	PANEL PV-A	1	PV AUXILIARY POWER PANEL, 100 AMP BUS WITH 15 AMP MAIN CIRCUIT BREAKER. REFER TO PANEL SCHEDULE FOR ADDITIONAL SPECIFICATIONS.
8	PV PRODUCTION MONITORING SYSTEM	1	CENTRAL DATA ACQUISITION UNIT, NEMA 3R ENCLOSURE WITH BATTERY BACK UP, LOCAL DATA STORAGE, INTEGRAL EHTERNET COMMUNICATIONS , WEB BASED DISPLAY AND LOCAL KEYPAD DISPLAY, PROVIDE 120V 1ϕ POWER SUPPLY
9	PHOTOVOLTAIC MONITORING METEOROLOGICAL STATION	1	STATION INCLUDES: REFERENC CELL FOR PYRANOMETER - PLANE OF ARRAY, BACK OF MODULE TEMPERATURE SENSOR WEATHER STATION FOR AMBIENT TEMPERATURE, WIND, AND RAIN SENSORS
10	PHOTOVOLTAIC PRODUCTION METER	1	REVENUE GRADE METER IN NEMA 3R ENCLOSURE PROVIDED AS PART OF THE MONITORING SYSTEM, PROVIDE 120V 1ϕ POWER SUPPLY.
11	RECEPTACLE	1	120V, 20 AMP, WEATHER PROOF GFI DUPLEX RECEPTACLE.
12	SERVICE DISCONNECT	1	400 AMP 3 POLE FUSED DISCONNECT WITH (3) 400 AMP FUSES, NEMA 12 ENCLOSURE WITHOUT KNOCKOUTS, DRAIN SCREW MUST BE REMOVED TO MAINTAIN OUTDOOR RATING. PROVIDE STICKER LABEL TO BE VISIBLE WHEN FUSE IS REMOVED TO READ "MAX 400A". SUITABLE FOR SERVICE ENTRANCE WHEN PROVIDED WITH NEUTRAL ASSEMBLY KIT AND EQUIPMENT GROUNDING KIT.
13	MEDIUM VOLTAGE FUSED SWITCH	1	15KV PAD MOUNTED SWITCH, WITH 60A STANDARD SPEED FUSES
14	COORDINATED POLE MOUNTED SWITCH	1	SWITCH TO MEET THE REQUIREMENTS OF THE UTILITY
15	GROUND ROD	3	3/4" DIAMETER, 10'-0" LONG COPPER CLAD GROUND ROD

PRELIMINARY
NOT FOR
CONSTRUCTION

Power Secure Solar Energy Solutions
1609 Heritage Commerce Ct.
Wake Forest, NC 27587

THIS LINE SHOULD MEASURE ONE INCH

REV.	DATE	DESCRIPTION

TITLE: PARTIAL PLAN – EQUIPMENT PAD FEEDER ROUTING
PROJECT: NRECA SUNDA REFERENCE DESIGN 250KW – 1,000Vdc
DATE: 02.06.2015
SHEET: PV3.1

Plot Date:2/16/2015

KEYED NOTES: (X)

1. PROVIDE IRREVERSIBLE BOND TO GROUND RING.
2. TO ARRAY, REFER TO ARRAY GROUNDING PLAN FOR CONTINUATION
3. TO FENCE, REFER TO ARRAY GROUNDING PLAN FOR CONTINUATION AND TO FENCE GROUNDING DETAIL FOR DETAIL
4. TO MEDIUM VOLTAGE FUSED SWITCH GROUND ROD, REFER TO ARRAY GROUNDING PLAN FOR CONTINUATION

EQUIPMENT SCHEDULE

**EQUIPMENT IS NOTED BY (#)

TAG	DESCRIPTION	QUANTITY	DESCRIPTION
1	SOLAR PV MODULE	1026	305 WATT MODULE (REFER TO DRAWINGS FOR QUANTITY AND LOCATION). MODULES SHALL BE LABELED PER NEC 690 VI.
2	INVERTER	11	23.2 KWATT, 3 PHASE 480 VOLT 4 WIRE & GROUND (REFER TO INVERTER RATING SCHEDULE FOR SPECIFICATION)
3	AC DISCONNECT	11	60 AMP 3 POLE FUSED DISCONNECT WITH (3) 35 AMP FUSES, NEMA 12 ENCLOSURE WITHOUT KNOCKOUTS, DRAIN SCREW MUST BE REMOVED TO MAINTAIN OUTDOOR RATING. PROVIDE STICKER LABEL TO BE VISIBLE WHEN FUSE IS REMOVED TO READ "MAX 35A". SUITABLE FOR SERVICE ENTRANCE WHEN PROVIDED WITH NEUTRAL ASSEMBLY KIT AND EQUIPMENT GROUNDING KIT.
4	PANEL PV-1	1	800 AMP BUS WITH MAIN LUGS ONLY. REFER TO PANEL SCHEDULE FOR ADDITIONAL SPECIFICATIONS.
5	MEDIUM VOLTAGE TRANSFORMER	1	250KVA, THREE PHASE, 12.47KV YGRD/7.2KV PRIMARY AND 480V WYE SECONDARY, LIQUID COOLED TRANSFORMER, BAYONET FUSES ON PRIMARY SIDE. REQUIRED TO MEET UTILITY REQUIREMENTS.
6	DISTRIBUTION TRANSFORMER	1	2KVA THREE PHASE GENERAL PURPOSE DRY TYPE TRANSFORMER, PRIMARY VOLTS 480 VAC, SECONDARY VOLTS 208/120 VAC, NEMA 3R ENCAPSULATED ENCLOSURE
7	PANEL PV-A	1	PV AUXILIARY POWER PANEL, 100 AMP BUS WITH 15 AMP MAIN CIRCUIT BREAKER. REFER TO PANEL SCHEDULE FOR ADDITIONAL SPECIFICATIONS.
8	PV PRODUCTION MONITORING SYSTEM	1	CENTRAL DATA ACQUISITION UNIT, NEMA 3R ENCLOSURE WITH BATTERY BACK UP, LOCAL DATA STORAGE, INTEGRAL EHTERNET COMMUNICATIONS , WEB BASED DISPLAY AND LOCAL KEYPAD DISPLAY, PROVIDE 120V 1ϕ POWER SUPPLY
9	PHOTOVOLTAIC MONITORING METEOROLOGICAL STATION	1	STATION INCLUDES: REFERENC CELL FOR PYRANOMETER - PLANE OF ARRAY, BACK OF MODULE TEMPERATURE SENSOR WEATHER STATION FOR AMBIENT TEMPERATURE, WIND, AND RAIN SENSORS
10	PHOTOVOLTAIC PRODUCTION METER	1	REVENUE GRADE METER IN NEMA 3R ENCLOSURE PROVIDED AS PART OF THE MONITORING SYSTEM, PROVIDE 120V 1ϕ POWER SUPPLY.
11	RECEPTACLE	1	120V, 20 AMP, WEATHER PROOF GFI DUPLEX RECEPTACLE.
12	SERVICE DISCONNECT	1	400 AMP 3 POLE FUSED DISCONNECT WITH (3) 400 AMP FUSES, NEMA 12 ENCLOSURE WITHOUT KNOCKOUTS, DRAIN SCREW MUST BE REMOVED TO MAINTAIN OUTDOOR RATING. PROVIDE STICKER LABEL TO BE VISIBLE WHEN FUSE IS REMOVED TO READ "MAX 400A". SUITABLE FOR SERVICE ENTRANCE WHEN PROVIDED WITH NEUTRAL ASSEMBLY KIT AND EQUIPMENT GROUNDING KIT.
13	MEDIUM VOLTAGE FUSED SWITCH	1	15KV PAD MOUNTED SWITCH, WITH 60A STANDARD SPEED FUSES
14	COORDINATED POLE MOUNTED SWITCH	1	SWITCH TO MEET THE REQUIREMENTS OF THE UTILITY
15	GROUND ROD	3	3/4" DIAMETER, 10'-0" LONG COPPER CLAD GROUND ROD

FEEDER SCHEDULE

**FEEDER IS NOTED BY (α)

TAG	CONDUCTOR TYPE	CONDUCTOR TYPE	INSULATION TYPE	GROUND SIZE	GROUND TYPE	GROUND INSULATION TYPE	RACEWAY SIZE	RACEWAY QUANTITY NOTE2
A8	(8) #10 PER RACEWAY	COPPER	PV	(1) #10 PER RACEWAY	COPPER	PV	1-1/4" NOTE5	(1)
A10	(10) #10 PER RACEWAY	COPPER	PV	(1) #10 PER RACEWAY	COPPER	PV	1-1/2" NOTE5	(1)
B	(3) #8 PER RACEWAY	COPPER	THWN-2	(1) #10 PER RACEWAY	COPPER	THWN-2	1"	(1)
	(1) #8 PER RACEWAY	COPPER	THWN-2					
C	(3) 300 KCMIL PER RACEWAY	ALUMINUM	THWN-2	(1) #3 PER RACEWAY	COPPER	THWN-2	3"	(2)
	(1) 300 KCMIL PER RACEWAY	ALUMINUM	THWN-2					
D	(3) 300 KCMIL PER RACEWAY	ALUMINUM	THWN-2				3"	(2)
	(1) 300 KCMIL PER RACEWAY	ALUMINUM	THWN-2					
E NOTE6	(3) #1/0 PER RACEWAY	ALUMINUM	MV TR-XLPE WITH CONCENTRIC NEUTRAL				4"	(1)
F	BLENDEN#3084A						3/4"	(1)
G	MANUFACTURER PROVIDED WHIP						1-1/4"	(1)
H	(3) #12 PER RACEWAY	COPPER	THWN-2	(1) #12 PER RACEWAY	COPPER	THWN-2	3/4"	(1)
	(1) #12 PER RACEWAY	COPPER	THWN-2					
I	(3) #12 PER RACEWAY	COPPER	THWN-2	(1) #12 PER RACEWAY	COPPER	THWN-2	3/4"	(1)
J	(1) #12 PER RACEWAY	COPPER	THWN-2	(1) #12 PER RACEWAY	COPPER	THWN-2	3/4"	(1)
	(1) #12 PER RACEWAY	COPPER	THWN-2					
K				(1) #3 PER RACEWAY	COPPER	THWN-2	3/4"	(1)
L				(1) #1/0 PER RACEWAY	COPPER	BARE		

NOTES:

1. (#) - DENOTES QUANTITY TO BE PROVIDED
2. WHERE MULITPLE CONDUITS ARE NOTED, THE RACEWAYS SHALL BE PROVIDED IN PARALLEL.
3. REFER TO RACEWAY APPLICATION SCHEDULE FOR RACEWAY TYPE.
4. ALL RACEWAY SIZES ARE NEC MINIMUM REQUIREMENTS, LARGER CONDUITS ARE PERMITED FOR EASE OF INSTALLATION.
5. PV SOURCE CIRCUITS SHALL NOT BE REQUIRED TO BE IN RACEWAY IF CONDUCTORS ARE NOT READILY ACCESSIBLE AND NOT EXPOSED TO PHYSICAL DAMAGE. BELOW GRADE PV SOURCE CIRCUITS SHALL BE IN RACEWAY.
6. PROVIDE 15KV MEDIUM VOLTGE FEEDERS WITH 100% INSULATION.

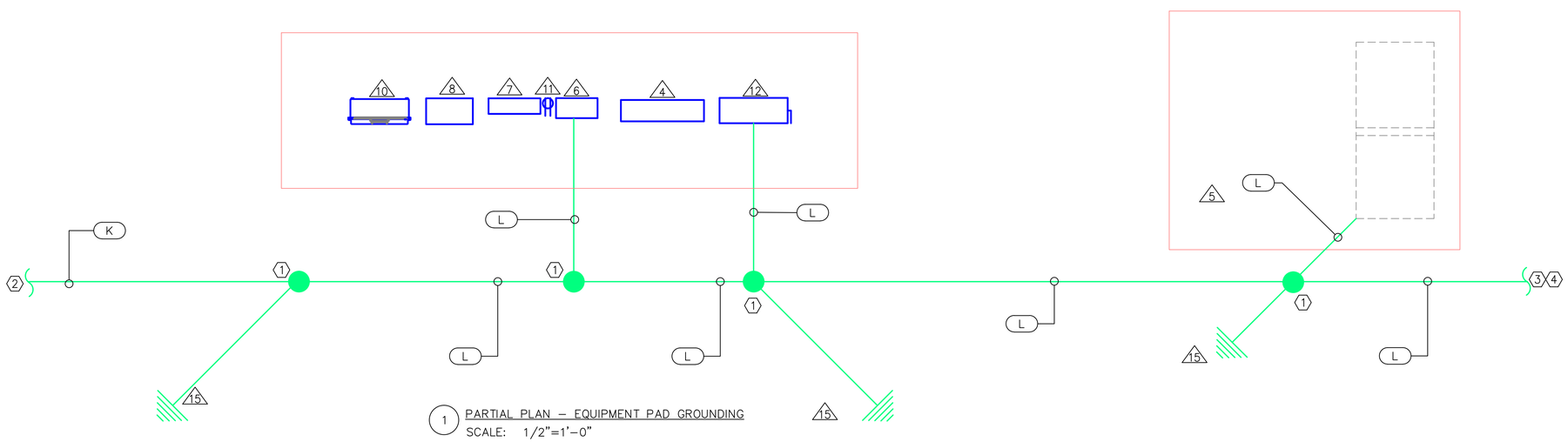

1 PARTIAL PLAN – EQUIPMENT PAD GROUNDING
SCALE: 1/2"=1'-0"

PRELIMINARY
NOT FOR
CONSTRUCTION

Power Secure
Solar Energy Solutions
1609 Heritage Commerce Ct.
Wake Forest, NC 27587

THIS LINE SHOULD MEASURE ONE INCH

REV.	DATE	DESCRIPTION

TITLE: PARTIAL PLAN – EQUIPMENT PAD GROUNDING

PROJECT: NRECA SUNDA REFERENCE DESIGN 250kW – 1,000Vdc

DATE: 02.06.2015

SHEET: PV3.2

Plot Date:2/10/2015

LINE TYPE LEGEND

- EQUIPMENT GROUNDING ELECTRODE (EGC)
- GROUNDING ELECTRODE CONDUCTOR (GEC)
- UTILITY NEUTRAL
- COMMUNICATIONS
- PROVIDED BY OTHERS

GENERAL NOTES:

1. USE COMPRESSION LUGS WITH BELLEVILLE WASHERS ON AC AND DC FEEDERS WITHIN INVERTER.

2. PROVIDE LABELS WITHIN THE COMBINER ON EACH PV OUTPUT CIRCUIT PER COMBINER DESIGNATION.

3. PROVIDE LIQUID TIGHT BONDING HUB ASSEMBLY ON EXTERIOR OF ENCLOSURE AT EACH CONDUIT PENETRATION FOR ENCLOSURES EXPOSED TO ELEMENTS.

4. PROVIDE APPROPRIATE TERMINATION COMPOUND ON ALL CONNECTIONS PER WIRE TYPE.
KOPR SHIELD: COPPER
ALUMINUM SHIELD: ALUMINUM

5. PROVIDE IRREVERSIBLE BONDS AT ALL GROUNDING ELECTRODE CONDUCTORS.

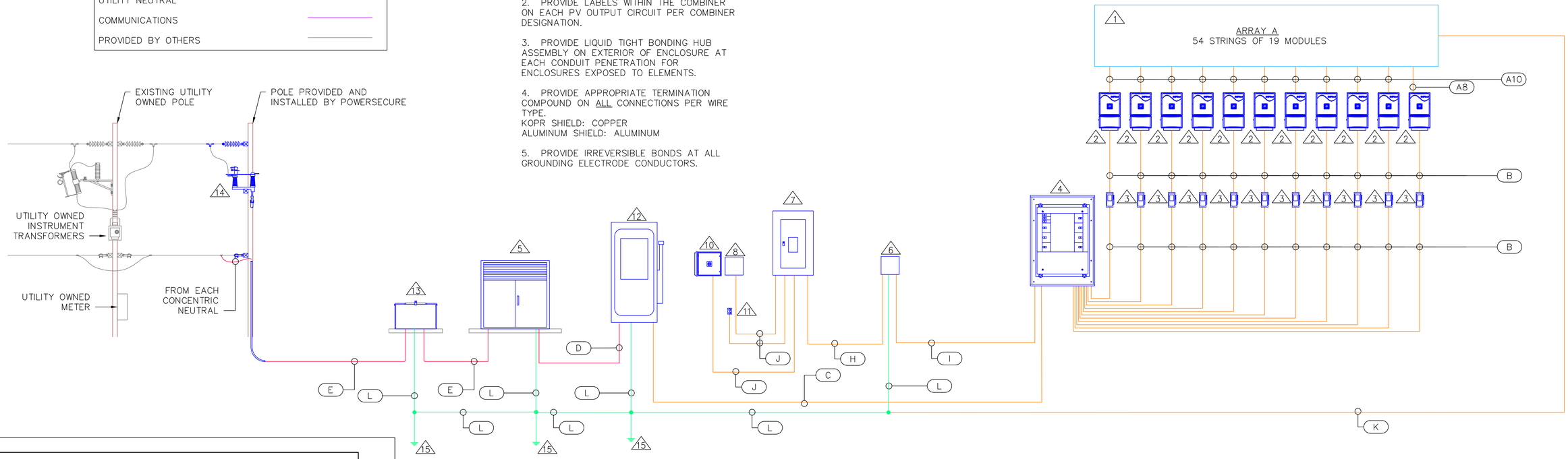

1 PV GROUNDING RISER DIAGRAM
SCALE: NONE

EQUIPMENT SCHEDULE
**EQUIPMENT IS NOTED BY #

TAG	DESCRIPTION	QUANTITY	DESCRIPTION
1	SOLAR PV MODULE	1026	305 WATT MODULE (REFER TO DRAWINGS FOR QUANTITY AND LOCATION). MODULES SHALL BE LABELED PER NEC 690.VI.
2	INVERTER	11	23.2 KWATT, 3 PHASE 480 VOLT 4 WIRE & GROUND (REFER TO INVERTER RATING SCHEDULE FOR SPECIFICATION)
3	AC DISCONNECT	11	60 AMP 3 POLE FUSED DISCONNECT WITH (3) 35 AMP FUSES, NEMA 12 ENCLOSURE WITHOUT KNOCKOUTS, DRAIN SCREW MUST BE REMOVED TO MAINTAIN OUTDOOR RATING. PROVIDE STICKER LABEL TO BE VISIBLE WHEN FUSE IS REMOVED TO READ "MAX 35A". SUITABLE FOR SERVICE ENTRANCE WHEN PROVIDED WITH NEUTRAL ASSEMBLY KIT AND EQUIPMENT GROUNDING KIT.
4	PANEL PV-1	1	800 AMP BUS WITH MAIN LUGS ONLY. REFER TO PANEL SCHEDULE FOR ADDITIONAL SPECIFICATIONS.
5	MEDIUM VOLTAGE TRANSFORMER	1	250KVA, THREE PHASE, 12.47KV YGRD/7.2KV PRIMARY AND 480V WYE SECONDARY, LIQUID COOLED TRANSFORMER, BAYONET FUSES ON PRIMARY SIDE. REQUIRED TO MEET UTILITY REQUIREMENTS.
6	DISTRIBUTION TRANSFORMER	1	2KVA THREE PHASE GENERAL PURPOSE DRY TYPE TRANSFORMER, PRIMARY VOLTS 480 VAC, SECONDARY VOLTS 208/120 VAC, NEMA 3R ENCAPSULATED ENCLOSURE
7	PANEL PV-A	1	PV AUXILIARY POWER PANEL, 100 AMP BUS WITH 15 AMP MAIN CIRCUIT BREAKER. REFER TO PANEL SCHEDULE FOR ADDITIONAL SPECIFICATIONS.
8	PV PRODUCTION MONITORING SYSTEM	1	CENTRAL DATA ACQUISITION UNIT, NEMA 3R ENCLOSURE WITH BATTERY BACK UP, LOCAL DATA STORAGE, INTEGRAL EHTERNET COMMUNICATIONS , WEB BASED DISPLAY AND LOCAL KEYPAD DISPLAY, PROVIDE 120V 1ϕ POWER SUPPLY.
9	PHOTOVOLTAIC MONITORING METEOROLOGICAL STATION	1	STATION INCLUDES: REFERENC CELL FOR PYRANOMETER - PLANE OF ARRAY, BACK OF MODULE TEMPERATURE SENSOR WEATHER STATION FOR AMBIENT TEMPERATURE, WIND, AND RAIN SENSORS
10	PHOTOVOLTAIC PRODUCTION METER	1	REVENUE GRADE METER IN NEMA 3R ENCLOSURE PROVIDED AS PART OF THE MONITORING SYSTEM, PROVIDE 120V 1ϕ POWER SUPPLY.
11	RECEPTACLE	1	120V, 20 AMP, WEATHER PROOF GFI DUPLEX RECEPTACLE.
12	SERVICE DISCONNECT	1	400 AMP 3 POLE FUSED DISCONNECT WITH (3) 400 AMP FUSES, NEMA 12 ENCLOSURE WITHOUT KNOCKOUTS, DRAIN SCREW MUST BE REMOVED TO MAINTAIN OUTDOOR RATING. PROVIDE STICKER LABEL TO BE VISIBLE WHEN FUSE IS REMOVED TO READ "MAX 400A". SUITABLE FOR SERVICE ENTRANCE WHEN PROVIDED WITH NEUTRAL ASSEMBLY KIT AND EQUIPMENT GROUNDING KIT.
13	MEDIUM VOLTAGE FUSED SWITCH	1	15KV PAD MOUNTED SWITCH, WITH 60A STANDARD SPEED FUSES
14	COORDINATED POLE MOUNTED SWITCH	1	SWITCH TO MEET THE REQUIREMENTS OF THE UTILITY
15	GROUND ROD	3	3/4" DIAMETER, 10'-0" LONG COPPER CLAD GROUND ROD

FEEDER SCHEDULE
**FEEDER IS NOTED BY α

TAG	CONDUCTOR TYPE	CONDUCTOR TYPE	INSULATION TYPE	GROUND SIZE	GROUND TYPE	GROUND INSULATION TYPE	RACEWAY SIZE	RACEWAY QUANTITY NOTES 1
A8	(8) #10 PER RACEWAY	COPPER	PV	(1) #10 PER RACEWAY	COPPER	PV	1-1/4" NOTES 1	(1)
A10	(10) #10 PER RACEWAY	COPPER	PV	(1) #10 PER RACEWAY	COPPER	PV	1-1/2" NOTES 1	(1)
B	(3) #8 PER RACEWAY	COPPER	THWN-2	(1) #10 PER RACEWAY	COPPER	THWN-2	1"	(1)
	(1) #8 PER RACEWAY	COPPER	THWN-2					
C	(3) 300 KCMIL PER RACEWAY	ALUMINUM	THWN-2	(1) #3 PER RACEWAY	COPPER	THWN-2	3"	(2)
	(1) 300 KCMIL PER RACEWAY	ALUMINUM	THWN-2					
D	(3) 300 KCMIL PER RACEWAY	ALUMINUM	THWN-2				3"	(2)
	(1) 300 KCMIL PER RACEWAY	ALUMINUM	THWN-2					
E NOTES 6	(3) #1/0 PER RACEWAY	ALUMINUM	MV TR-XLPE WITH CONCENTRIC NEUTRAL				4"	(1)
F	BLENDEN#3084A						3/4"	(1)
G	MANUFACTURER PROVIDED WHIP						1-1/4"	(1)
H	(3) #12 PER RACEWAY	COPPER	THWN-2	(1) #12 PER RACEWAY	COPPER	THWN-2	3/4"	(1)
	(1) #12 PER RACEWAY	COPPER	THWN-2					
I	(3) #12 PER RACEWAY	COPPER	THWN-2	(1) #12 PER RACEWAY	COPPER	THWN-2	3/4"	(1)
J	(1) #12 PER RACEWAY	COPPER	THWN-2	(1) #12 PER RACEWAY	COPPER	THWN-2	3/4"	(1)
	(1) #12 PER RACEWAY	COPPER	THWN-2					
K				(1) #3 PER RACEWAY	COPPER	THWN-2	3/4"	(1)
L				(1) #1/0 PER RACEWAY	COPPER	BARE		

NOTES:
1. (#) DENOTES QUANTITY TO BE PROVIDED
2. WHERE MULITPLE CONDUITS ARE NOTED, THE RACEWAYS SHALL BE PROVIDED IN PARALLEL.
3. REFER TO RACEWAY APPLICATION SCHEDULE FOR RACEWAY TYPE.
4. ALL RACEWAY SIZES ARE NEC MINIMUM REQUIREMENTS, LARGER CONDUITS ARE PERMITED FOR EASE OF INSTALLATION.
5. PV SOURCE CIRCUITS SHALL NOT BE REQUIRED TO BE IN RACEWAY IF CONDUCTORS ARE NOT READILY ACCESSIBLE AND NOT EXPOSED TO PHYSICAL DAMAGE. BELOW GRADE PV SOURCE CIRCUITS SHALL BE IN RACEWAY.
6. PROVIDE 15KV MEDIUM VOLTGE FEEDERS WITH 100% INSULATION.

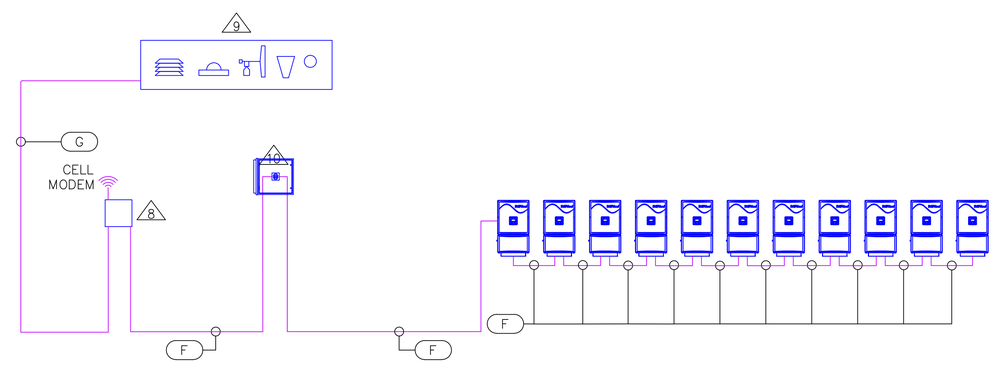

2 PV COMMUNICATIONS RISER DIAGRAM
SCALE: NONE

PRELIMINARY
NOT FOR
CONSTRUCTION

Power Secure
Solar Energy Solutions
1609 Heritage Commerce Ct.
Wake Forest, NC 27587

THIS LINE SHOULD MEASURE ONE INCH

REV.	DATE	DESCRIPTION

TITLE: PV RISER DIAGRAMS

PROJECT: NRECA SUNDA REFERENCE DESIGN 250kW – 1,000Vdc

DATE: 02.06.2015

SHEET: PV4.0

Plot Date:2/16/2015

KEYED NOTES: (1)

1. BARBED WIRE.
2. PROVIDE COMPRESSION SPLICE WITH C–TAP TO CONNECT WIRE TO OUTSIDE BARB.
3. PROVIDE EXOTHERMIC WELD TO TOP RAIL.
4. #6 BARE COPPER WIRE, TYPICAL UNLESS NOTED OTHERWISE.
5. PROVIDE COMPRESSION SPLICE WITH C–TAP TO CONNECT WIRE TO FENCE FABRIC.
6. PROVIDE EXOTHERMIC WELD TO FENCE POST.
7. 3/4" X 10' COPPER CLAD GROUND ROD BONDED TO BARE COPPER WITH EXOTHERMIC WELD.
8. FLEXIBLE GROUND BRAID SECURED TO GATE WITH EXOTHERMIC WELD.
9. GATES SHALL BE BONDED TOGETHER.

GENERAL NOTE:

1. ALL FENCE GROUNDING POINTS SHALL BE LOCATED WITHIN FENCE PERIMETER.
2. GROUND CORNER POSTS & ADDITIONAL POSTS AT 500' INTERVALS.
3. GROUND ALL GATE POSTS.

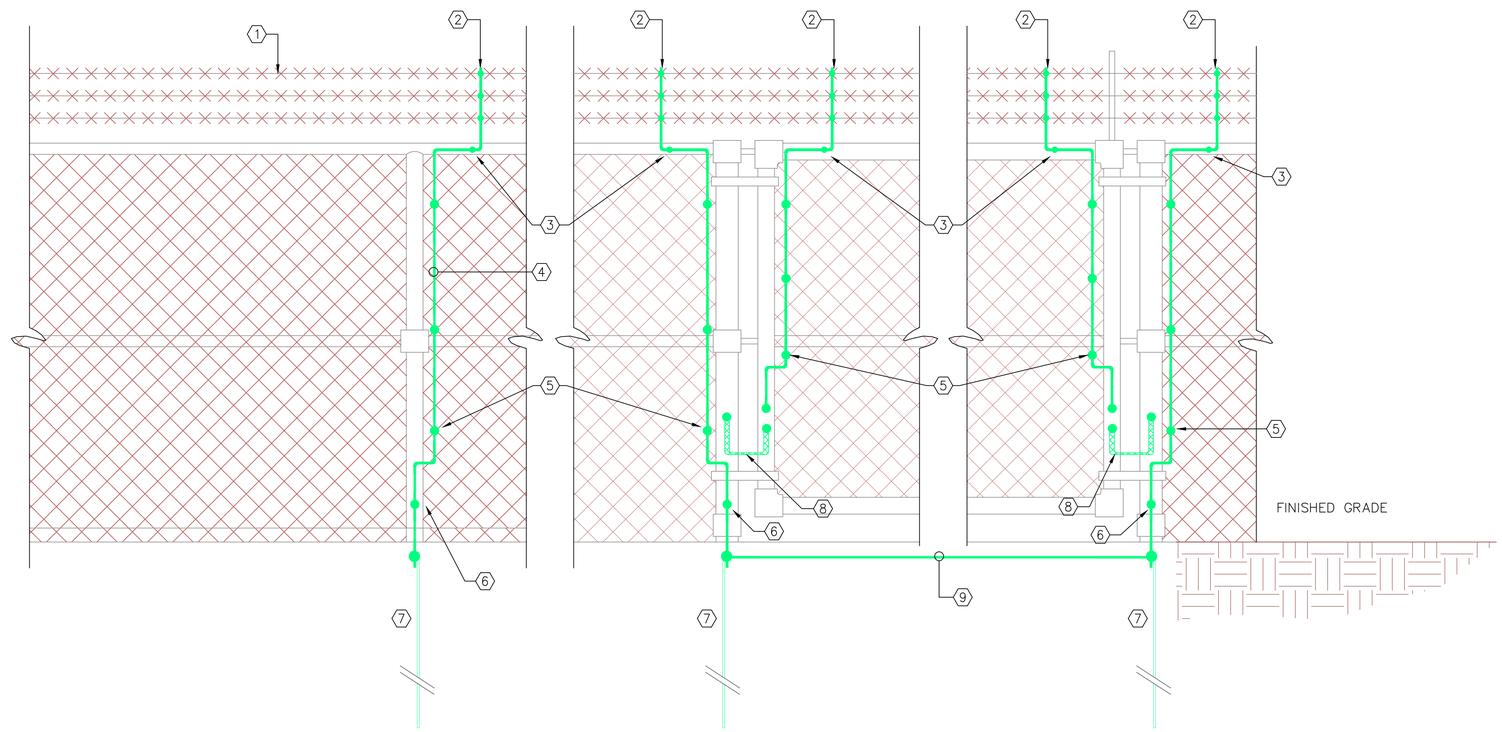

PRELIMINARY
NOT FOR
CONSTRUCTION

Power Secure
Solar Energy Solutions
1609 Heritage Commerce Ct.
Wake Forest, NC 27587

THIS LINE SHOULD MEASURE ONE INCH

REV.	DATE	DESCRIPTION

TITLE: FENCE GROUNDING DETAIL

PROJECT: NRECA SUNDA REFERENCE DESIGN 250KW – 1,000Vdc

DATE: 02.06.2015

SHEET: PV4.1

Plot Date:2/16/2015

NOTE

WHERE SCHEDULE 80 PVC IS PROVIDED BELOW GRADE, NO TRANSITION OF RACEWAY SHALL BE REQUIRED WHERE EXPOSED TO PHYSICAL DAMAGE.

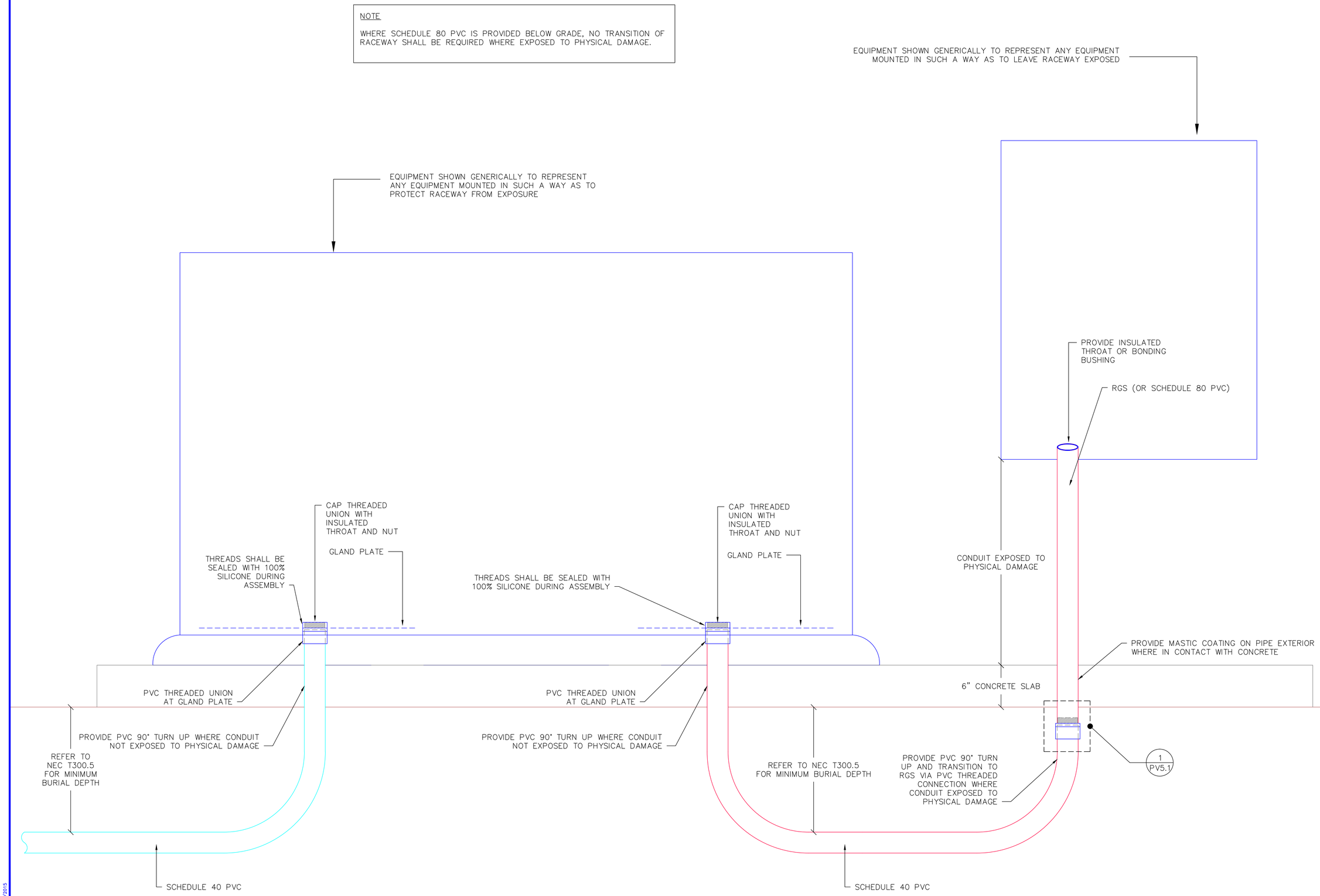

PRELIMINARY
NOT FOR
CONSTRUCTION

Power Secure
Solar Energy Solutions
1609 Heritage Commerce Ct.
Wake Forest, NC 27587

THIS LINE SHOULD
MEASURE ONE INCH

REV.	DATE	DESCRIPTION

TITLE: CONDUIT STUB UP DETAIL

PROJECT: NRECA
SUNDA REFERENCE DESIGN
250KW – 1,000Vdc

DATE: 02.06.2015

SHEET: PV5.0

Plot Date:2/16/2015

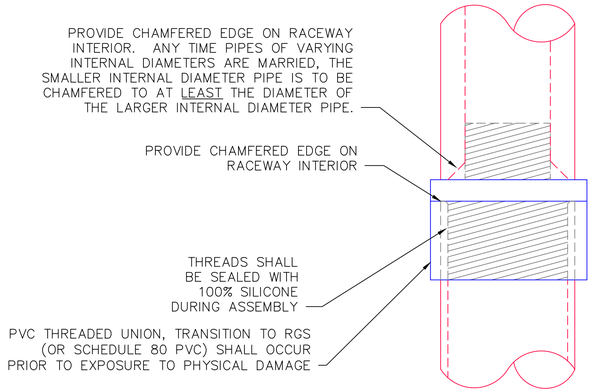

1 CONDUIT MATERIAL TRANSITION DETAIL – PVC TO RGS
SCALE: NONE

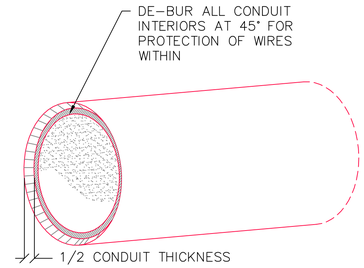

NOTE:

ALL CHAMFERED EDGE DETAILS APPLY TO FIELD-CUT PVC ONLY

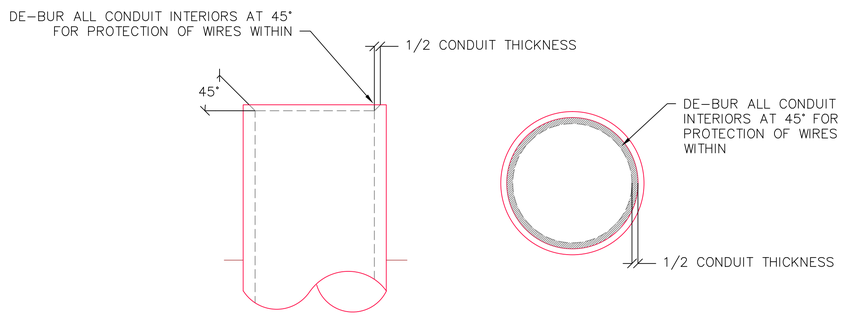

2 CHAMFERED EDGE DETAILS
SCALE: NONE

PRELIMINARY
NOT FOR
CONSTRUCTION

Power Secure
Solar Energy Solutions
1609 Heritage Commerce Ct.
Wake Forest, NC 27587

THIS LINE SHOULD MEASURE ONE INCH

REV.	DATE	DESCRIPTION

TITLE: CONDUIT DETAILS & COMBINER DETAIL

PROJECT: NRECA SUNDA REFERENCE DESIGN 250KW – 1,000Vdc

DATE: 02.06.2015

SHEET: PV5.1

Plot Date:2/16/2015

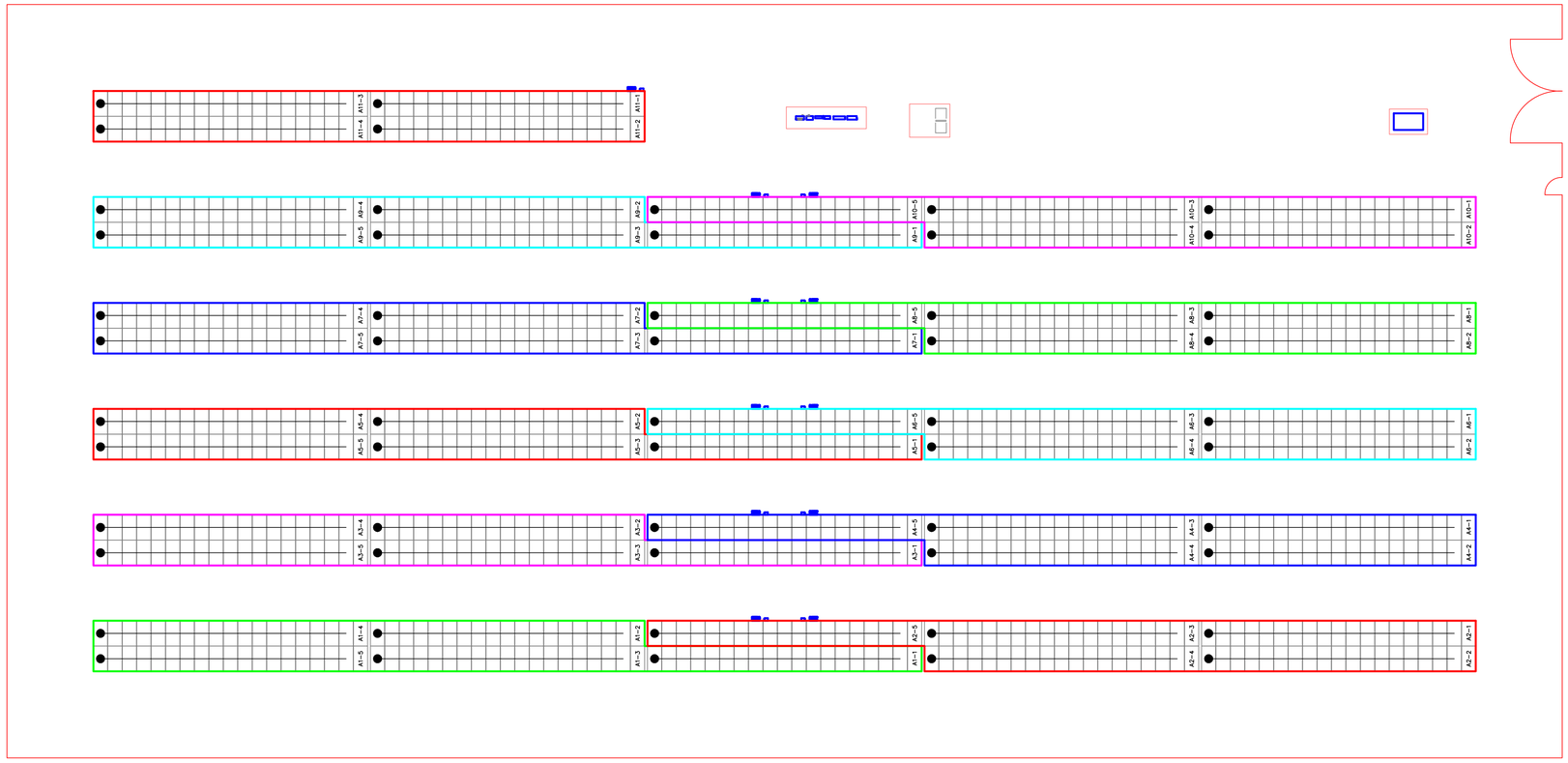

1 STRINGING PLAN – ARRAY A
SCALE: 1/16"=1'-0"

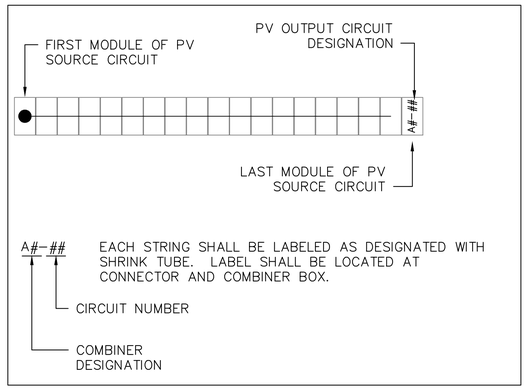

PRELIMINARY
NOT FOR
CONSTRUCTION

N

PowerSecure
Solar Energy Solutions
1609 Heritage Commerce Ct.
Wake Forest, NC 27587

THIS LINE SHOULD MEASURE ONE INCH

REV.	DATE	DESCRIPTION

TITLE: STRINGING PLAN – ARRAY A

PROJECT: NRECA
SUNDA REFERENCE DESIGN
250kW – 1,000Vdc

DATE: 02.06.2015
SHEET: PV6.0

Plot Date:2/16/2015